OREGON ADMINISTRATIVE RULES
OREGON HEALTH AUTHORITY, PUBLIC HEALTH DIVISION

CHAPTER 333, DIVISION 61

PUBLIC WATER SYSTEMS

Table of Contents

OAR 333-061-0005 Purpose 1
OAR 333-061-0010 Scope 1
OAR 333-061-0015 Adoption By Reference 2
OAR 333-061-0020 Definitions 2
OAR 333-061-0025 Responsibilities of Water Suppliers 21
OAR 333-061-0030 Maximum Contaminant Levels and Action Levels 23
OAR 333-061-0031 Maximum Residual Disinfectant Levels 30
OAR 333-061-0032 Treatment Requirements and Performance Standards 30
(1) General Requirements for Water Systems Using Surface Water or GWUDI 30
(2) Surface Water or GWUDI Without Filtration 33
(3) Disinfection When Using Surface Water or GWUDI Without Filtration 36
(4) Surface Water or GWUDI With Filtration 37
(5) Disinfection When Using Surface Water or GWUDI With Filtration 41
(6) Groundwater Sources 41
(7) Monitoring for Groundwater Sources With 4-log Treatment of Viruses 44
(8) Determination of Groundwater Under the Direct Influence of Surface Water 46
(9) Alternative Filtration Credit Through Bank Filtration 50
(10) Disinfection Byproduct Control Requirements 50
(11) Water Treatment Plant Recycled Water 55
(12) Uncovered Finished Water Storage Facilities 56
(13) General Microbial Toolbox Components for *Cryptosporidium* Treatment 56
(14) Source Components for *Cryptosporidium* Treatment 58
(15) Pre-Filtration Treatment Components for *Cryptosporidium* Treatment 61
(16) Treatment Performance Components for *Cryptosporidium* Treatment 63
(17) Additional Filtration Components for *Cryptosporidium* Treatment 64
(18) Inactivation Components for *Cryptosporidium* Treatment 65
OAR 333-061-0034 Treatment and Performance Standards for Corrosion Control 65
(1) General Requirements 65
(2) Corrosion Control Treatment Steps 66
(3) Corrosion Control Treatment Requirements 70
(4) Source Water Treatment 73
(5) Consumer Notice and Public Education 75
OAR 333-061-0036 Sampling and Analytical Requirements 81
(1) General 81
(2) Inorganic Chemicals 86

(3) Organic Chemicals 110
(4) Disinfectant Residuals, Byproducts and Byproduct Precursors 120
(5) Surface Water Treatment 142
(6) Coliform Bacteria and Microbiological Contaminants 165
(7) Radionuclides 179
(8) Secondary Contaminants 184
(9) Disinfectant Residual Monitoring In The Distribution System 184
OAR 333-061-0040 Reporting and Record Keeping 185
(1) Reporting 185
(2) Record Maintenance by Water Suppliers 204
OAR 333-061-0042 Public Notice 207
OAR 333-061-0043 Consumer Confidence Reports 219
(1) Delivery Deadlines 219
(2) Content of the Reports 219
(3) Detected Contaminants 220
(4) Additional Health Information 246
(5) Special Requirements for Groundwater Systems 249
(6) Report Delivery and Recordkeeping 250
OAR 333-061-0045 Variances 251
OAR 333-061-0046 Permits 255
OAR 333-061-0050 Construction Standards 257
(1) General 257
(2) Groundwater Source Facilities 258
(3) Surface Water and GWUDI Source Facilities 262
(4) Water Treatment Facilities 263
(5) Facilities for Disinfection and Disinfectant Residual Maintenance 274
(6) Finished Water Storage Facilities 277
(7) Pumping Facilities 279
(8) Distribution Systems 279
(9) Crossings of Sanitary Sewers or Water Lines 281
(10) Disinfection of New or Repaired Facilities 282
OAR 333-061-0055 Waivers from Construction Standards 284
OAR 333-061-0057 Voluntary Drinking Water Protection Program 285
OAR 333-061-0060 Plan Submission and Review 288
OAR 333-061-0061 Capacity Requirements for Public Water Systems 293
OAR 333-061-0062 Land Use Coordination 296
OAR 333-061-0063 Safe Drinking Water Revolving Loan Fund Environmental Review 297
OAR 333-061-0064 Emergency Response Plan Requirements 300
OAR 333-061-0065 Operations and Maintenance 302
OAR 333-061-0070 Cross Connection Control 305
OAR 333-061-0071 Backflow Prevention Assembly Installation and Operation 311

OAR 333-061-0072 Backflow Assembly Tester Certification……315
OAR 333-061-0073 Cross Connection Specialist Certification……..318
OAR 333-061-0074 Cross Connection Training and Instructor Requirements 321
OAR 333-061-0075 Sanitary Surveys of Watersheds…….325
OAR 333-061-0076 Sanitary Surveys 326
OAR 333-061-0077 Composite Correction & Comprehensive Performance Evaluations 329
OAR 333-061-0078 Coliform Investigations……..330
OAR 333-061-0080 Role of Counties 333
OAR 333-061-0085 Supplemental Fluoridation.....333
OAR 333-061-0087 Product Acceptability Criteria 334
OAR 333-061-0090 Civil Penalties 335
OAR 333-061-0095 Severability 336
OAR 333-061-0097 Adverse Health Effects Language 336
OAR 333-061-0098 References.....347
OAR 333-061-0210 Scope of Operator Certification Rules.....348
OAR 333-061-0220 Water Treatment Plant Water Distribution System Classification.....348
OAR 333-061-0225 General Requirements for Water Suppliers and Water Systems 351
OAR 333-061-0228 Certification for Small Water System Operators.....352
OAR 333-061-0230 Contracting For Services.....353
OAR 333-061-0232 General Requirements for Water System Operators 353
OAR 333-061-0235 Operator Certification Requirements.....354
OAR 333-061-0245 Application for Certification.....356
OAR 333-061-0250 Examination for Certification 357
OAR 333-061-0260 Certification Renewal 357
OAR 333-061-0265 Fees 358
OAR 333-061-0270 Refusal, Suspension, or Revocation of Certification.....359
OAR 333-061-0272 Suspension of Certification.....359
OAR 333-061-0305 Purpose of Domestic Well Testing Rules 360
OAR 333-061-0310 Scope of Domestic Well Testing Rules 360
OAR 333-061-0324 Area of Public Health Concern.....360
OAR 333-061-0325 Domestic Well Tests.....361
OAR 333-061-0330 Domestic Well Sample Analysis 362
OAR 333-061-0335 Domestic Well Sample Collection.....362

OREGON ADMINISTRATIVE RULES
OREGON HEALTH AUTHORITY, PUBLIC HEALTH DIVISION
CHAPTER 333

DIVISION 61

PUBLIC WATER SYSTEMS

333-061-0005
Purpose
The purpose of these rules is to provide a basis for implementing the Oregon Drinking Water Quality Act of 1981, enacted to assure safe drinking water at all water systems which serve the public, and to promote coordination between the programs for supervising water systems which are conducted by the Authority and the U.S. Environmental Protection Agency.
Stat. Auth.: ORS 448.131
Stats. Implemented: ORS 448.123 & 448.273

333-061-0010
Scope
(1) These rules apply to all public water systems providing piped water for human consumption as defined by the Act.

(2) These rules also apply to all public water systems providing water for human consumption through constructed conveyances other than pipes after Aug. 5, 1998 to at least 15 service connections or that regularly serves at least 25 individuals daily at least 60 days of the year. A water system which meets any of the following "service connection" exclusion criteria and thereby reduces the number of service connections to fewer than 15 and serving fewer than 25 individuals is not a Public Water System:
   (a) Water provided by the supplier to the connection is not used for human consumption;
   (b) Alternative water (i.e. bottled water, hauled water, or other source) meeting State and Federal water quality standards, as prescribed in OAR 333-061-0030 or 21 CFR 165, is provided by the supplier to the connection for drinking and cooking;
   (c) Treated water meeting State standards, as prescribed in OAR 333-061-0030, applied centrally or at point-of-entry is provided by the supplier, pass-through entity or user to the connection for drinking, cooking and personal hygiene.

(3) These rules do not apply to:
   (a) A public water system that:

(A) Consists only of distribution and storage facilities and does not have any source or treatment facilities installed to comply with the maximum contaminant levels covered by these rules; and
(B) Obtains all of its water from, but is not owned or operated by, a public water system to which these rules apply; and
(C) Does not sell water directly to any person; and
(D) Is not a carrier which conveys passengers in interstate commerce.

(b) An irrigation district in existence prior to May 18, 1994, that provides primarily agricultural service through a piped water system to at least 15 service connections or serving at least 25 individuals daily at least 60 days of the year with only incidental residential or similar use, and where all of the connections comply with the alternative or treated water exclusions prescribed in subsections (2)(b) or (c) of this rule.

(c) A public water system that distributes water through submeters if that water system:
(A) Receives all of its water from, but is not owned by, another public water system; and
(B) Consists only of distribution and storage facilities and where all such facilities and all submeters are located on a single parcel of property, and the water system does not have any source or treatment facilities installed to comply with the maximum contaminant levels covered by these rules.

Stat. Auth.: ORS 448.131
Stats. Implemented: ORS 448.131

333-061-0015
Adoption by Reference

All standards, listings and publications referred to in these rules are, by those references, made a part of these rules as though fully set forth. Copies are available from the Authority.

Stat. Auth.: ORS 448.131
Stats. Implemented: ORS 448.131

333-061-0020
Definitions

As used in these rules, unless the context indicates otherwise:

(1) "Act" means the Oregon Drinking Water Quality Act of 1981 (ORS 448.115-448.990 as amended).

(2) "Action Level" means the concentration of lead or copper in water which determines, in some cases, the treatment requirements that a water system is required to complete.

(3) "Administrator" means the Director of the Oregon Health Authority or his/her designee.

(4) "Analytical Run" means the process during which a set of analytical drinking water samples along with an appropriate number of blanks, matrix spikes, or quality control samples are analyzed according to National Environmental Laboratory Accreditation Conference (NELAC) requirements to determine the presence, absence, or concentration of a specific target analyte or analytes. An analytical run is complete when the instrument performing the sample analysis generates a report of the sample analysis.

(5) "Approval" or "Approved" means approved in writing.

(6) "Approved Air Gap (AG)" means a physical separation between the free-flowing discharge end of a potable water supply pipeline and an open or non-pressurized receiving vessel. An "Approved Air Gap" shall be at least twice the diameter of the supply pipe measured vertically above the overflow rim of the vessel and in no case less than 1 inch (2.54 cm), and in accord with Oregon Plumbing Specialty Code.

(7) "Approved Backflow Prevention Assembly" means a Reduced Pressure Principle Backflow Prevention Assembly, Reduced Pressure Principle-Detector Backflow Prevention Assembly, Double Check Valve Backflow Prevention Assembly, Double Check-Detector Backflow Prevention Assembly, Pressure Vacuum Breaker Backsiphonage Prevention Assembly, or Spill-Resistant Pressure Vacuum Breaker Backsiphonage Prevention Assembly, of a make, model, orientation, and size approved by the Authority. Assemblies listed in the currently approved backflow prevention assemblies list developed by the University of Southern California, Foundation for Cross-Connection Control and Hydraulic Research, or other testing laboratories using equivalent testing methods, are considered approved by the Authority.

(8) "Aquifer" means a water saturated and permeable geological formation, group of formations, or part of a formation that is capable of transmitting water in sufficient quantity to supply wells or springs.

(9) "Aquifer Parameter" means a characteristic of an aquifer, such as thickness, porosity or hydraulic conductivity.

(10) "Aquifer Test" means pumping a well in a manner that will provide information regarding the hydraulic characteristics of the aquifer.

(11) "Area of public health concern" means an area of the state with a confirmed presence of groundwater contaminants likely to cause adverse human health effects.

(12) "Atmospheric Vacuum Breaker (AVB)" means a non-testable device consisting of an air inlet valve or float check, a check seat and an air inlet port(s). This device is designed to protect against a non-health hazard or a health hazard under a backsiphonage condition only. Product and material approval is under the Oregon Plumbing Specialty Code.

(13) "Authority" means the Oregon Health Authority or its designee.

(14) "Auxiliary Water Supply" means any supply of water used to augment the supply obtained from the public water system, which serves the premises in question.

(15) "Average Groundwater Velocity" means the average velocity at which groundwater moves through the aquifer as a function of hydraulic gradient, hydraulic conductivity and porosity.

(16) "AWWA" means the American Water Works Association.

(17) "Backflow" means the flow of water or other liquids, mixtures, or substances into the distributing pipes of a potable supply of water from any sources other than its intended source, and is caused by backsiphonage or backpressure.

(18) "Backflow Preventer" means a device, assembly or method to prevent backflow into the potable water system.

(19) "Backflow Prevention Assembly" means a backflow prevention assembly such as a Pressure Vacuum Breaker Backsiphonage Prevention Assembly, Spill-Resistant Pressure Vacuum Breaker Backsiphonage Prevention Assembly, Double Check Valve Backflow Prevention Assembly, Double Check-Detector Backflow Prevention Assembly, Reduced Pressure Principle Backflow Prevention Assembly, or Reduced Pressure Principle-Detector Backflow Prevention Assembly and the attached shutoff valves on the inlet and outlet ends of the assembly, assembled as a complete unit.

(20) "Backpressure" means an elevation of pressure downstream of the distribution system that would cause, or tend to cause, water to flow opposite of its intended direction.

(21) "Backsiphonage" means a drop in distribution system pressure below atmospheric pressure (partial vacuum), that would cause, or tend to cause, water to flow opposite of its intended direction.

(22) "Bank Filtration" means a water treatment process that uses a horizontal or vertical well to recover surface water that has naturally infiltrated into groundwater through a river bed or bank(s). Infiltration is typically enhanced by the hydraulic gradient imposed by a nearby pumping water supply.

(23) "Best Available Technology" or "BAT" means the best technology, treatment techniques, or other means which the EPA finds, after examination for efficacy under field conditions and not solely under laboratory conditions, are available (taking cost into consideration).

(24) "Bore-Sighted Drain to Daylight" means an unrestricted straight-line opening in an enclosure that vents to grade, and is sized and constructed to adequately drain the full flow discharge from a reduced pressure principle backflow prevention assembly thus preventing any potential for submersion of the assembly.

(25) "Bottled Water" means potable water from a source approved by the Authority for domestic use which is placed in small, easily transportable containers.

(26) "Calculated Fixed Radius" means a technique to delineate a wellhead protection area, based on the determination of the volume of the aquifer needed to supply groundwater to a well over a given length of time.

(27) "CFR" means the Code of Federal Regulations. Specifically, it refers to those sections of the code which deal with the National Primary and Secondary Drinking Water Regulations.

(28) "Check Valve" means a valve, which allows flow in only one direction.

(29) "Coagulation" means a process using coagulant chemicals and mixing by which colloidal and suspended materials are destabilized and agglomerated into floc.

(30) "Coliform Investigation" means an evaluation to identify the possible presence of sanitary defects, defects in distribution system coliform monitoring practices, and (when possible) the likely reason that the investigation was triggered at the water system. Coliform investigations are classified as level 1 or level 2 as prescribed by OAR 333-061-0078.

(31) "Coliform-Positive" means the presence of coliform bacteria in a water sample.

(32) "Combined distribution system" means the interconnected distribution system consisting of the distribution systems of wholesale water systems and of the purchasing water systems that receive finished water.

(33) "Community Water System" means a public water system that has 15 or more service connections used by year-round residents, or that regularly serves 25 or more year-round residents.

(34) "Compliance Cycle" means the nine-year calendar year cycle during which public water systems must monitor. Each compliance cycle consists of three three-year compliance periods. The first calendar year cycle begins January 1, 1993 and ends December 31, 2001.

(35) "Compliance Period" means a three-year calendar year period within a compliance cycle. Each compliance cycle has three three-year compliance periods. Within the first compliance cycle, the first compliance period runs from January 1, 1993 to December 31, 1995; the second from January 1, 1996 to December 31, 1998; and the third from January 1, 1999 to December 31, 2001.

(36) "Comprehensive performance evaluation (CPE)" means a thorough review and analysis of a treatment plant's performance-based capabilities and associated administrative, operation and maintenance practices. It is conducted to identify factors that may be adversely impacting a plant's capability to achieve compliance and emphasizes approaches that can be implemented without significant capital improvements. The CPE must consist of at least the following components: Assessment of plant performance; evaluations of major unit processes; identification and prioritization of performance limiting factors; assessment of the applicability of comprehensive technical assistance; and preparation of a CPE report.

(37) "Conceptual Model" means a three-dimensional representation of the groundwater system, including the location and extent of the hydrogeologic units, areas of recharge and discharge, hydrogeologic boundaries and hydraulic gradient.

(38) "Confined Well" means a well completed in a confined aquifer. More specifically, it is a well which produces water from a formation that is overlain by an

impermeable material of extensive area. This well shall be constructed according to OAR chapter 690, division 200 "Well Construction and Maintenance" standards.

(39) "Confluent Growth" means a continuous bacterial growth covering the entire filtration area of a membrane filter, or a portion thereof, in which bacterial colonies are not discrete.

(40) "Constructed Conveyance" means any human-made conduit such as ditches, culverts, waterways, flumes, mine drains, canals or any human-altered natural water bodies or waterways as determined by the Authority.

(41) "Contaminant" means any physical, chemical, biological, or radiological substance or matter in water that creates a health hazard.

(42) "Contingency Plan" means a document setting out an organized, planned and coordinated course of action to be followed in the event of a loss of capacity to supply water to the distribution system or in case of a fire, explosion or release of hazardous waste which could threaten human health or the environment.

(43) "Continuing Education Unit (CEU)" means a nationally recognized unit of measurement for assigning credits for education or training that provides the participant with advanced or post high school learning. One CEU is awarded for every 10 classroom hours of lecture or the equivalent of participation in an organized education experience, conducted under responsible sponsorship, capable direction and qualified instruction as determined by the Authority or its designee.

(44) "Conventional Filtration Treatment Plant" means a water treatment plant using conventional or direct filtration to treat surface water or groundwater under the direct influence of surface water.

(45) "Corrosion Inhibitor" means a substance capable of reducing the corrosivity of water toward metal plumbing materials, especially lead and copper, by forming a protective film on the interior surface of those materials.

(46) "Cross Connection" means any actual or potential unprotected connection or structural arrangement between the public or user's potable water system and any other source or system through which it is possible to introduce into any part of the potable system any used water, industrial fluid, gas, or substances other than the intended potable water with which the system is supplied. Bypass arrangements, jumper connections, removable sections, swivel, or change-over devices, and other temporary or permanent devices through which, or because of which, backflow can occur are considered to be cross connections.

(47) "CT" means the product of the residual disinfectant concentration "C" (measured in mg/l) and disinfectant contact time(s), "T" (measured in minutes).

(48) "Degree of Hazard" means either pollution (non-health hazard) or contamination (health hazard) and is determined by an evaluation of hazardous conditions within a system.

(49) "Delineation" means the determination of the extent, orientation and boundaries of a wellhead protection area using factors such as geology, aquifer characteristics, well pumping rates and time of travel.

(50) "Demonstration Study" means a series of tests performed to prove an overall effective removal or inactivation rate of a pathogenic organism through a treatment or disinfection process.

(51) "Direct Responsible Charge (DRC)" means an individual designated by the owner or authorized agent to make decisions regarding the daily operational activities of a public water system, water treatment facility or distribution system, that will directly impact the quality or quantity of drinking water.

(52) "Discharge" means the volume rate of loss of groundwater from the aquifer through wells, springs or to surface water.

(53) "Disinfectant Contact Time" means the time in minutes that it takes for water to move from the point of disinfectant application or the previous point of disinfection residual measurement to a point before or at the point where residual disinfectant concentration is measured.

(54) "Disinfectant Residual Maintenance" means a process where public water systems add chlorine (or other chemical oxidant) for the purpose of maintaining a disinfectant residual in the distribution system, when the source(s) is not at risk of microbial contamination.

(55) "Disinfection" means a process which inactivates pathogenic organisms in water by chemical oxidants or equivalent agents.

(56) "Disinfection profile" means a summary of *Giardia lamblia* inactivation through the treatment plant.

(57) "Distribution System" means that portion of the water system in which water is stored or conveyed from the water treatment plant or other supply point to the premises of a consumer.

(58) "Domestic" means provided for human consumption.

(59) "Domestic or other non-distribution system plumbing problem" means a coliform contamination problem in a public water system with more than one service connection that is limited to the specific service connection from which the coliform-positive sample was taken.

(60) "Dose Equivalent" means the product of the absorbed dose from ionizing radiation and such factors as account for differences in biological effectiveness due to the type of radiation and its distribution in the body as specified by the International Commission on Radiological Units and Measurements (ICRU).

(61) "Double Check-Detector Backflow Prevention Assembly (DCDA)" means a specially designed assembly composed of a line size approved double check valve assembly assembled with a bypass containing a specific water meter and an approved double check valve assembly. The meter shall register accurately for only very low rates of flow up to three gallons per minute and shall show a registration for all rates of flow. This assembly is designed to protect against a non-health hazard.

(62) "Double Check Valve Backflow Prevention Assembly (DC)" means an assembly of two independently acting approved check valves, including tightly closing

resilient seated shutoff valves attached at each end of the assembly and fitted with properly located resilient seated test cocks. This assembly is designed to protect against a non-health hazard.

(63) "Drawdown" means the difference, measured vertically, between the static water level in the well and the water level during pumping.

(64) "Drinking Water Protection" means implementing strategies within a drinking water protection area to minimize the potential impact of contaminant sources on the quality of water being used as a drinking water source by a Public Water System.

(65) "Drinking Water Protection Area (DWPA)" means the source area supplying drinking water to a Public Water System. For a surface water-supplied drinking water source the DWPA is all or a specifically determined part of a lake's, reservoir's or stream's watershed that has been certified by the Department of Environmental Quality. For a groundwater-supplied drinking water source the DWPA is the area on the surface that directly overlies that part of the aquifer that supplies groundwater to a well, well field or spring that has been certified by the Authority.

(66) "Drinking Water Protection Plan" means a plan, certified by the Department of Environmental Quality according to OAR 340-040-0160 to 340-040-0180, which identifies the actions to be taken at the local level to protect a specifically defined and certified drinking water protection area. The plan is developed by the local Responsible Management Authority or team and includes a written description of each element, public participation efforts, and an implementation schedule.

(67) "Dual sample set" means a set of two samples collected at the same time and same location, with one sample analyzed for TTHM and the other for HAA5. Dual sample sets are collected for the purposes of conducting an Initial Distribution System Evaluation (IDSE) as prescribed in 333-061-0036(4)(b) of these rules, and for determining compliance with the maximum contaminant levels for TTHM and HAA5 listed in OAR 333-061-0030(2)(b).

(68) "Effective Corrosion Inhibitor Residual" means a concentration sufficient to form a passivating film on the interior walls of a pipe.

(69) "Effective Porosity" means the ratio of the volume of interconnected voids (openings) in a geological formation to the overall volume of the material.

(70) "Element" means one of seven objectives considered by the U.S. EPA as the minimum required components in any state wellhead protection program: specification of duties, delineation of the wellhead protection area, inventory of potential contaminant sources, specification of management approaches, development of contingency plans, addressing new (future) wells, and ensuring public participation.

(71) "Emergency" means a condition resulting from an unusual calamity such as a flood, storm, earthquake, drought, civil disorder, volcanic eruption, an accidental spill of hazardous material, or other occurrence which disrupts water service at a

public water system or endangers the quality of water produced by a public water system.

(72) "Emergency Response Plan" means a written document establishing contacts, operating procedures, and actions taken for a public water system to minimize the impact or potential impact of a natural disaster, accident, or intentional act which disrupts or damages, or potentially disrupts or potentially damages the public water system or drinking water supply, and returns the public water system to normal operating condition.

(73) "Enhanced coagulation" means the addition of sufficient coagulant for improved removal of disinfection byproduct precursors by conventional filtration treatment.

(74) "Enhanced softening" means the improved removal of disinfection byproduct precursors by precipitative softening.

(75) "EPA" means the United States Environmental Protection Agency.

(76) "Filter profile" means a graphical representation of individual filter performance, based on continuous turbidity measurements or total particle counts versus time for an entire filter run, from start-up to backwash inclusively, that includes an assessment of filter performance while another filter is being backwashed.

(77) "Filtration" means a process for removing particulate matter from water through porous media.

(a) "Bag filtration" means a pressure-driven separation process that removes particulate matter using engineered media. It is typically constructed of a non-rigid, fabric filtration media housed in a pressure vessel in which the direction of flow is from the inside of the bag to the outside.

(b) "Cartridge filtration" means a pressure-driven separation process that removes particulate matter using engineered media. It is typically constructed of rigid or semi-rigid, self-supporting filter elements housed in a pressure vessel in which flow is from the outside of the cartridge to the inside.

(c) "Conventional Filtration Treatment" means a series of processes including coagulation (requiring the use of a primary coagulant and rapid mix), flocculation, sedimentation, and filtration resulting in substantial particulate removal.

(d) "Direct Filtration Treatment" means a series of processes including coagulation (requiring the use of a primary coagulant and rapid mix) and filtration but excluding sedimentation resulting in substantial particulate removal.

(e) "Diatomaceous Earth Filtration" means a process resulting in substantial particulate removal in which:

(A) A precoat cake of diatomaceous earth filter media is deposited on a support membrane (septum); and

(B) While the water is filtered by passing through the cake on the septum, additional filter media, known as body feed, is continuously added to the feed water, in order to maintain the permeability of the filter cake.

(f) "Membrane filtration" means a pressure or vacuum driven separation process in which particulate matter larger than one micrometer is rejected by engineered media, primarily through a size-exclusion mechanism, and which has a measurable removal efficiency of a target organism that can be verified through the application of a direct integrity test. This definition includes the common membrane technologies of microfiltration, ultrafiltration, nanofiltration, and reverse osmosis.

(g) "Slow Sand Filtration" means a process involving passage of raw water through a bed of sand at low velocity (generally less than 235 gallons per square foot per day) resulting in substantial particulate removal by both physical and biological mechanisms.

(78) "Filtration Endorsement" means a special certification that may be added to an operator's water treatment level 2 certification, and is related to the operator's experience with and knowledge of the operation of conventional and direct filtration treatment.

(79) "Finished water" means water that is introduced into the distribution system of a public water system and intended for distribution and consumption without further treatment, except as necessary to maintain water quality in the distribution system such as booster disinfection or the addition of corrosion control chemicals.

(80) "First Customer" means the initial service connection or tap on a public water supply after any treatment processes.

(81) "First Draw Sample" means a one-liter sample of tap water that has been standing in plumbing pipes at least 6 hours and is collected without flushing the tap.

(82) "Flocculation" means a process to enhance agglomeration or collection of smaller floc particles into larger, more easily settleable particles through gentle stirring by hydraulic or mechanical means.

(83) "Flowing stream" means a course of running water flowing in a definite channel.

(84) "Future Groundwater Sources" means wells or springs that may be required by the public water system in the future to meet the needs of the system.

(85) "GAC 10" means granular activated carbon filter beds with an empty-bed contact time of 10 minutes based on average daily flow and a carbon reactivation frequency of every 180 days, except that the reactivation frequency for GAC10 used as a best available technology for compliance with OAR 333-061-0030(2)(b) shall be 120 days.

(86) "GAC 20" means granular activated carbon filter beds with an empty-bed contact time of 20 minutes based on average daily flow and a carbon reactivation frequency of every 240 days.

(87) "Gross Alpha Particle Activity" means the total radioactivity due to alpha particle emission as inferred from measurements on a dry sample.

(88) "Gross Beta Particle Activity" means the total radioactivity due to beta particle emission as inferred from measurements on a dry sample.

(89) "Groundwater" means any water, except capillary moisture, beneath the land surface or beneath the bed of any stream, lake, reservoir or other body of surface water within the boundaries of this state, whatever may be the geologic formation or structure in which such water stands, flows, percolates or otherwise moves.

(90) "Groundwater System" means any public water system that uses groundwater, including purchasing water systems that receive finished groundwater, but excluding public water systems that combine all of their groundwater with surface water or groundwater under the direct influence of surface water prior to treatment.

(91) "Groundwater under the direct influence of surface water" or "GWUDI" means any water beneath the surface of the ground with significant occurrence of insects or other macro-organisms, algae or large-diameter pathogens such as *Giardia lamblia* or *Cryptosporidium*, or significant and relatively rapid shifts in water characteristics such as turbidity, temperature, conductivity, or pH which closely correlate to climatological or surface water conditions.

(92) "Haloacetic acids (five)" or "HAA5" means the sum of the concentrations in milligrams per liter of the haloacetic acid compounds (monochloroacetic acid, dichloroacetic acid, trichloroacetic acid, monobromoacetic acid and dibromoacetic acid), rounded to two significant figures after addition.

(93) "Hauled Water" means water for human consumption transported from a Public Water System in a manner approved by the Authority.

(94) "Health Hazard (Contamination)" means an impairment of the quality of the water that could create an actual hazard to the public health through poisoning or through the spread of disease by sewage, industrial fluids, waste, or other substances.

(95) "Human Consumption" means water used for drinking, personal hygiene bathing, showering, cooking, dishwashing, and maintaining oral hygiene.

(96) "Hydraulic Conductivity" means the capacity of the medium, for example, soil, aquifer, or any hydrogeological unit of interest, to transmit water.

(97) "Hydraulic Connection" refers to a well, spring or other groundwater collection system in which it has been determined that part of the water supplied by the collection system is derived, either naturally or induced, from a surface water source.

(98) "Hydraulic Gradient" means the slope of the water table or potentiometric surface, calculated by dividing the change in hydraulic head between two points by the horizontal distance between the points in the direction of groundwater flow.

(99) "Hydraulic Head" means the energy possessed by the water mass at a given point, related to the height above the datum plane that water resides in a well drilled to that point. In a groundwater system, the hydraulic head is composed of elevation head and pressure head.

(100) "Hydrogeologic Boundary" means physical features that bound and control direction of groundwater flow in a groundwater system. Boundaries may be in the

form of a constant head, for example, streams, or represent barriers to flow, for example, groundwater divides and impermeable geologic barriers.

(101) "Hydrogeologic Mapping" means characterizing hydrogeologic features (for example, hydrogeologic units, hydrogeologic boundaries, etc.) within an area and determining their location, areal extent and relationship to one another.

(102) "Hydrogeologic Unit" means a geologic formation, group of formations, or part of a formation that has consistent and definable hydraulic properties.

(103) "Impermeable Material" means a material that limits the passage of water.

(104) "Impounding Reservoir" means an uncovered body of water formed behind a dam across a river or stream, and in which water is stored.

(105) "Infiltration Gallery" means a system of perforated pipes laid along the banks or under the bed of a stream or lake installed for the purpose of collecting water from the formation beneath the stream or lake.

(106) "Initial Compliance Period" means the 1993-95 three-year compliance period for systems with 150 or more service connections and the 1996-98 three-year compliance period for systems having fewer than 150 service connections for the contaminants prescribed in OAR 333-061-0036(2)(a), 333-061-0036(3)(a) and (3)(b).

(107) "Interfering Wells" means wells that, because of their proximity and pumping characteristics, and as a result of the aquifer's hydraulic properties, produce drawdown cones that overlap during simultaneous pumping. The result is a lowering of the pumping level in each well below what it would be if that well were pumping by itself.

(108) "Inventory of Potential Contaminant Sources" means the reconnaissance level location of land use activities within the Drinking Water Protection Area that as a category have been associated with groundwater or surface water contamination in Oregon and elsewhere in the United States.

(109) "Lake/reservoir" means a natural or man-made basin or hollow on the Earth’s surface in which water collects or is stored that may or may not have a current or single direction of flow.

(110) "Lead Free" means:

(a) Not containing more than 0.2 percent lead when used with respect to solders and flux; and

(b) Not more than a weighted average of 0.25 percent lead when used with respect to the wetted surfaces of pipes, pipe fittings, plumbing fittings, and fixtures.

(111) "Lead Service Line" means a service line made of lead, which connects the water main to the building inlet and any pigtail, gooseneck or other fitting, which is connected to such lead line.

(112) "Legionella" means a genus of bacteria, some species of which have caused a type of pneumonia called Legionnaires Disease.

(113) "Local Administrative Authority" means the individual official, board, department or agency established and authorized by a state, county or city to administer and enforce the provisions of the Oregon State Plumbing Specialty Code adopted under OAR 918-750-0110.

(114) "Locational running annual average (LRAA)" means the arithmetic average of analytical results for samples taken at a specific monitoring location during the previous four calendar quarters.

(115) "Major Additions or Modifications" means changes of considerable extent or complexity including, but not limited to, projects involving water sources, treatment facilities, facilities for continuous disinfection, finished water storage, pumping facilities, transmission mains, and distribution mains, except main replacements of the same length and diameter.

(116) "Man-made Beta Particle and Photon Emitters" means all radionuclides emitting beta particles or photons listed in **Maximum Permissible Body Burdens and Maximum Permissible Concentration of Radionuclides in Air or Water for Occupational Exposure, NBS Handbook 69,** except the daughter products of Thorium-232, Uranium-235 and Uranium-238.

(117) "Master Plan" means an overall plan, which shows the projected development of a distribution system and alternatives for source development.

(118) "Maximum Contaminant Level" or "MCL" means the maximum allowable level of a contaminant in water delivered to the users of a public water system, except in the case of turbidity where the maximum allowable level is measured at the point of entry to the distribution system.

(119) "Maximum Residual Disinfectant Level (MRDL)" means a level of a disinfectant added for water treatment that may not be exceeded at the consumer's tap without an unacceptable possibility of adverse health effects.

(120) "Multi-purpose Piping System" means a piping system within residential dwellings intended to serve both domestic and fire protection needs. This type of system is considered part of a potable water system.

(121) "New Groundwater Sources" means additional or modified wells or springs owned by the Public Water System.

(122) "Non-Health Hazard (Pollution)" means an impairment of the quality of the water to a degree that does not create a hazard to the public health, but does adversely affect the aesthetic qualities of such water for potable use.

(123) "Non-Transient Non-Community Water System (NTNC)" means a public water system that is not a Community Water System and that regularly serves at least 25 of the same persons over 6 months per year.

(124) "Open Interval" means in a cased well, the sum of the length(s) of the screened or perforated zone(s) and in an uncased (open-hole) well, the sum of the thickness(es) of the water-bearing zones or, if undeterminable, 10 percent of the length of the open hole.

(125) "Operating Experience" means knowledge gained through the direct performance of duties, tasks, and responsibilities at a drinking water system or in a related field.
(126) "Operational Decision Making" means the act of making decisions about alternatives in the performance of a water treatment plant or distribution system relating to water quality or water quantity that may affect public health.
(127) "Operator," means a person responsible for the operation of a water treatment plant or distribution system.
(128) "Optimal Corrosion Control Treatment" means the corrosion control treatment that minimizes the lead and copper concentrations at users' taps while insuring that the treatment does not cause the water system to violate any national primary drinking water regulations.
(129) "Pathogenic" means a specific agent (bacterium, virus or parasite) causing or capable of causing disease.
(130) "Peak Daily Demand" means the maximum rate of water use, expressed in gallons per day, over the 24-hour period of heaviest consumption.
(131) "Permit" means official permission granted by the Authority for a public water system which exceeds maximum contaminant levels to delay, because of economic or other compelling factors, the installation of water treatment facilities which are necessary to produce water which does not exceed maximum contaminant levels.
(132) "Person" means any individual, corporation, association, firm, partnership, municipal, state or federal agency, or joint stock company and includes any receiver, special master, trustee, assignee, or other similar representative thereof.
(133) "Picocurie (pCi)" means that quantity of radioactive material producing 2.22 nuclear transformations per minute.
(134) "Pilot Study" means the construction and operation of a scaled down treatment system during a given period of time to determine the feasibility a full-scale treatment facility.
(135) "Plant intake" means the works or structures at the head of a conduit through which water is diverted from a source, such as a river or lake, into a treatment plant.
(136) "Plug Flow" means movement of water in a pipe such that particles pass through the pipe and are discharged in the same sequence in which they entered.
(137) "Point of Delivery (POD)" means the point of connection between a public water system and the user's water system. Beyond the point of delivery, the Oregon Plumbing Specialty Code applies. See "Service Connection."
(138) "Point of Disinfectant Application" is the point where the disinfectant is applied and water downstream of that point is not subject to recontamination by surface water runoff.
(139) "Point-of-Entry Treatment Device" is a treatment device applied to the drinking water entering a house or building for the purpose of reducing contaminants in the drinking water distributed throughout the house or building.
(140) "Point-of-Use Treatment Device" is a treatment device applied to a single tap used for the purpose of reducing contaminants in drinking water at that one tap.

(141) "Pollutant" means a substance that creates an impairment of the quality of the water to a degree which does not create a hazard to the public health, but which does adversely affect the aesthetic qualities of the water.

(142) "Porous Media Assumption" means the assumption that groundwater moves in the aquifer as if the aquifer were granular in character, that is moves directly down-gradient, and the velocity of the groundwater can be described by Darcy's Law.

(143) "Post High School Education" means that education acquired through programs such as short schools, bona fide correspondence courses, trade schools, colleges, universities, formalized workshops or seminars that are acceptable to the Authority and for which college or continuing education credit is issued by the training sponsor.

(144) "Potable Water" See Safe Drinking Water.

(145) "Potential Contaminant Source Inventory" means the determination of the location within the wellhead protection area of activities known to use or produce materials that can contaminate groundwater.

(146) "Potential Cross Connection" means a cross connection that would most likely occur, but may not be taking place at the time of an inspection.

(147) "Potentiometric Surface" means a surface that denotes the variation of hydraulic head in the given aquifer across an area.

(148) "Premises" means real estate and the structures on it.

(149) "Premises Isolation" means the practice of protecting the public water supply from contamination or pollution by installing backflow prevention assemblies at, or near, the point of delivery where the water supply enters the premises. Premises isolation does not guarantee protection to persons on the premises.

(150) "Presedimentation" means a preliminary treatment process used to remove gravel, sand and other particulate material from the source water through settling before the water enters the primary clarification and filtration processes in a treatment plant.

(151) "Pressure Vacuum Breaker Backsiphonage Prevention Assembly (PVB)" means an assembly consisting of an independently operating, internally loaded check valve and an independently operating loaded air inlet valve located on the discharge side of the check valve. This assembly is to be equipped with properly located resilient seated test cocks and tightly closing resilient seated shutoff valves attached at each end of the assembly. This assembly is designed to protect against a non-health hazard or a health hazard under backsiphonage conditions only.

(152) "Provisional Delineation" means approximating the wellhead protection area for a well by using the wellhead protection area from another well in the same hydrogeologic setting or by using generalized values for the aquifer characteristics to generate an approximate wellhead protection area for the well. Used only for the purpose of evaluating potential siting of new or future groundwater sources. Not an acceptable way to formally delineate a wellhead protection area.

(153) "Public Health Hazard" means a condition, device or practice which is conducive to the introduction of waterborne disease organisms, or harmful chemical, physical, or radioactive substances into a public water system, and which presents an unreasonable risk to health.

(154) "Public Water System" means a system for the provision to the public of piped water for human consumption, if such system has more than three service connections, or supplies water to a public or commercial establishment that operates a total of at least 60 days per year, and that is used by 10 or more individuals per day. Public water system also means a system for the provision to the public of water through constructed conveyances other than pipes to at least 15 service connections or regularly serves at least 25 individuals daily at least 60 days of the year. A public water system is either a "Community Water System," a "Transient Non-Community Water System," a "Non-Transient Non-Community Water System" or a "State Regulated Water System."

(155) "Purchasing Water System" means a public water system which obtains its water in whole or in part from one or more public water systems. Delivery may be through a direct connection or through the distribution system of one or more purchasing water systems.

(156) "Recharge" means the process by which water is added to a zone of saturation, usually by downward infiltration from the surface.

(157) "Recharge Area" means a land area in which water percolates to the zone of saturation through infiltration from the surface.

(158) "Recovery" means the rise in water level in a well from the pumping level towards the original static water level after pumping has been discontinued.

(159) "Reduced Pressure Principle Backflow Prevention Assembly (RP)" means an assembly containing two independently acting approved check valves, together with a hydraulically operating, mechanically independent pressure differential relief valve located between the check valves and at the same time below the first check valve. The unit shall include properly located resilient seated test cocks and tightly closing resilient seated shutoff valves at each end of the assembly. This assembly is designed to protect against a non-health hazard or a health hazard.

(160) "Reduced Pressure Principle-Detector Backflow Prevention Assembly (RPDA)" means a specifically designed assembly composed of a line size approved reduced pressure principle backflow prevention assembly with a bypass containing a specific water meter and an approved reduced pressure principle backflow prevention assembly. The meter shall register accurately for only very low rates of flow up to three gallons per minute and shall show a registration for all rates of flow. This assembly is designed to protect against a non-health hazard or a health hazard.

(161) "Rem" means the unit of dose equivalent from ionizing radiation to the total body or any internal organ or organ system. A "millirem (mrem)" is 1/1000 of a rem.

(162) "Repeat Compliance Period" means any subsequent compliance period after the initial compliance period.

(163) "Residual disinfectant concentration" means the concentration of disinfectant measured in mg/l in a representative sample of water.

(164) "Responsible Management Authority" means the Public Water System whose water supply is being protected and any government entity having management, rule or ordinance-making authority to implement wellhead protection management strategies within the wellhead protection area. The Responsible Management Authority is responsible for implementation of the Wellhead Protection Plan and includes cities, counties, special districts, Indian tribes, state/federal entities as well as public water systems.

(165) "Safe Drinking Water" means water which has sufficiently low concentrations of microbiological, inorganic chemical, organic chemical, radiological or physical substances so that individuals drinking such water at normal levels of consumption, will not be exposed to disease organisms or other substances which may produce harmful physiological effects.

(166) "Sanitary Defect" means a defect that could provide a pathway of entry for microbial contamination into the distribution system or that is indicative of a failure or imminent failure in a barrier that is already in place.

(167) "Sanitary Survey (Water System Survey)" means an on-site review of the water source(s), facilities, equipment, operation, maintenance and monitoring compliance of a public water system to evaluate the adequacy of the water system, its sources and operations in the distribution of safe drinking water. The sanitary survey also identifies sources of contamination by using the results of source water assessments where available.

(168) "Seasonal water system" means a water system operated as a non-community public water system only part of each year and that is started up at the beginning and shut down at the end of each operating season.

(169) "Secondary Contaminant" means those contaminants, which, at the levels generally found in drinking water, do not present an unreasonable risk to health, but do:

(a) Have adverse effects on the taste, odor and color of water;

(b) Produce undesirable staining of plumbing fixtures; or

(c) Interfere with treatment processes applied by water suppliers.

(170) "Secondary Maximum Contaminant Level (SMCL)" means the level of a secondary contaminant which when exceeded may adversely affect the aesthetic quality of the drinking water which thereby may deter public acceptance of drinking water provided by public water systems or may interfere with water treatment methods.

(171) "Sedimentation" means a process for removal of solids before filtration by gravity or separation.

(172) "Seller's Designee" means the person assigned by the seller to complete the necessary paperwork and submit the lab results to the Authority and can be the

seller's attorney, real estate agent or broker, the person conducting the tests or a private party.

(173) "Sensitivity" means the intrinsic characteristics of a drinking water source such as depth to the aquifer for groundwater or highly erodible soils in a watershed that increase the potential for contamination to take place if a contaminant source is present.

(174) "Service Connection" means the piping connection by means of which water is conveyed from a distribution main of a public water system to a user's premises. For a community water system, the portion of the service connection that conveys water from the distribution main to the user's property line, or to the service meter, where provided, is under the jurisdiction of the water supplier.

(175) "Significant Deficiency" means a defect in design, operation, or maintenance, or a malfunction of the source(s), treatment, storage, or distribution system that has been determined to cause or have the potential for causing the introduction of contamination into the water delivered to consumers.

(176) "Single Connection System" means a public water system serving only one installation, such as a restaurant, campground or place of employment.

(177) "Single Family Structure" means a building constructed as a single-family residence that is currently used as either a residence or a place of business.

(178) "Small Water System," for the purposes of OAR 333-061-0210 through 0272, means a community or non-transient non-community water system serving 150 service connections or less using only groundwater or purchasing finished water from another public water system.

(179) "Source Water Assessment" means the information compiled by the Authority and the Department of Environmental Quality (DEQ), consisting of the delineation, inventory and susceptibility analyses of the drinking water source, which enable public water systems to develop and implement drinking water protection plans.

(180) "Specific Ultraviolet Absorption (SUVA) at 254 nanometers" means an indicator of the humic content of water as a calculated parameter obtained by dividing a sample's ultraviolet absorption at a wavelength of 254 nanometers (UV254) by its concentration of dissolved organic carbon (DOC) (in milligrams per liter).

(181) "Spill Resistant Pressure Vacuum Breaker Backsiphonage Prevention Assembly (SVB)" means an assembly containing an independently operating, internally loaded check valve and independently operating loaded air inlet valve located on the discharge side of the check valve. The assembly is to be equipped with a properly located resilient seated test cock, a properly located bleed/vent valve, and tightly closing resilient seated shutoff valves attached at each end of the assembly. This assembly is designed to protect against a non-health hazard or a health hazard under a backsiphonage condition only.

(182) "Spring" means a naturally occurring discharge of flowing water at the ground surface, or into surface water where the flow of water is the result of gravity or

artesian pressure. Springs can be derived from groundwater or they can be surface water influenced.

(183) "Stand-alone Fire Suppression System" means a piping system within a premises intended to only serve as a fire protection system separated from the potable water system.

(184) "State Regulated Water System" means a public water system, which serves 4 to 14 service connections or serves 10 to 24 people. Monitoring requirements for these systems are the same as those for Transient Non-Community water systems.

(185) "Static Water Level" means the vertical distance from ground surface to the water level in the well when the well is at rest, that is, the well has not been pumped recently and the water level is stable. This is the natural level of water in the well.

(186) "Submeter" means a water meter by which a property owner (or association of property owners) meters individual water use after the water passes through a master meter. For the purposes of OAR 333-061-0010, submetering does not constitute applying a direct charge for water or directly selling water to a person.

(187) "Surface Water" means all water, which is open to the atmosphere and subject to surface runoff.

(188) "Susceptibility" means the potential, as a result of the combination of land use activities and source water sensitivity, that contamination of the drinking water source may occur.

(189) "Team" means the local Wellhead Protection team, which includes representatives from the Responsible Management Authorities and various interests and stakeholders potentially affected by the Wellhead Protection Plan.

(190) "Thermal Expansion" means the pressure increase due to a rise in water temperature that occurs in water piping systems when such systems become "closed" by the installation of a backflow prevention assembly or other means, and will not allow for expansion beyond that point of installation.

(191) "These Rules" means the Oregon Administrative Rules encompassed by OAR 333-061-0005 through 333-061-0335.

(192) "Time-of-Travel (TOT)" means the amount of time it takes groundwater to flow to a given well. TOT is the criterion that effectively determines the radius in the calculated fixed radius method and the up-gradient distance to be used for the analytical and numerical models during delineation of the wellhead protection area.

(193) "Too Numerous to Count (TNTC)" means that the total number of bacterial colonies exceeds 200 on a 47 mm diameter membrane filter used for coliform bacteria detection.

(194) "Total Organic Carbon (TOC)" means total organic carbon in milligrams per liter measured using heat, oxygen, ultraviolet irradiation, chemical oxidants, or combinations of these oxidants that convert organic carbon to carbon dioxide, rounded to two significant figures.

(195) "Total Trihalomethanes" or "TTHM" means the sum of the concentrations in milligrams per liter of the trihalomethane compounds bromodichloromethane,

dibromochloromethane, tribromomethane (bromoform) and trichloromethane (chloroform), rounded to two significant figures after addition.

(196) "Transient Non-Community Water System (TNC)" means a public water system that serves a transient population of 25 or more persons.

(197) "Turbidity" means a measure of the cloudiness of water caused by suspended particles. The units of measure for turbidity are nephelometric turbidity units (NTU).

(198) "Two-stage lime softening" means a process in which a chemical addition and hardness precipitation occur in each of two distinct unit clarification processes in series prior to filtration.

(199) "Unconfined Well" means a well completed in an unconfined aquifer, and more specifically, a well which produces water from a formation that is not overlaying by impermeable material. This well shall be constructed according to OAR chapter 690, division 200 "Well Construction and Maintenance" standards.

(200) "Uncovered finished water storage facility" means a tank, reservoir, or other facility used to store water that will undergo no further treatment to reduce microbial pathogens except residual disinfection and is directly open to the atmosphere.

(201) "University of Southern California, Foundation for Cross-Connection Control and Hydraulic Research (USC FCCCHR)" is an agency that conducts laboratory and field tests to evaluate and grant "Certificates of Approval" to backflow prevention assemblies meeting approved standards.

(202) "Vadose Zone" means the zone between the ground surface and the water table where the available open spaces between soil and sediment particles, in rock fractures, etc., are most filled with air.

(203) "Variance" means official permission granted by the Authority for public water systems to exceed maximum contaminant levels because the quality of the raw water is such that the best available treatment techniques are not capable of treating the water so that it complies with maximum contaminant levels, and there is no unreasonable risk to health.

(204) "Vault" means an approved enclosure above or below ground to house a backflow prevention assembly that complies with the local administrative authority having jurisdiction.

(205) "Virus" means a virus of fecal origin, which is infectious to humans by waterborne transmission.

(206) "Vulnerability" has the same meaning as susceptibility.

(207) "Waiver" means official permission from the Authority for a public water system to deviate from the construction standards set forth in these rules.

(208) "Water-bearing Zone" means that part or parts of the aquifer encountered during drilling that yield(s) water to a well.

(209) "Waterborne disease outbreak" means the significant occurrence of acute infectious illness, epidemiologically associated with the ingestion of water from a

public water system which is deficient in treatment, as determined by the Authority.

(210) "Water Source" means any lake, stream, spring, groundwater supply, impoundment or other source of water from which water is obtained for a public water system. In some cases, a public water system can be the source of supply for one or more other public water systems.

(211) "Water Supplier" means a person, group of persons, municipality, district, corporation or other entity, which owns or operates a public potable water system.

(212) "Water System" means a system for the provision of piped water for human consumption.

(213) "Water System Operations Manual" means a written document describing the actions and procedures necessary to operate and maintain the entire water system.

(214) "Water Table" means the upper surface of an unconfined aquifer, the surface of which is at atmospheric pressure and fluctuates seasonally. It is defined by the levels at which water stands in wells that penetrate the aquifer.

(215) "Water Treatment" means a process of altering water quality by physical or chemical means and may include domestic, industrial or commercial applications.

(216) "Water Treatment Plant" means that portion of a water system that in some way alters the physical, chemical, or bacteriological quality of the water being treated.

(217) "Well" means an artificial opening or artificially altered natural opening, however made, by which ground water is sought or through which ground water flows under natural pressure or is artificially withdrawn or injected, provided that this definition shall not include a natural spring, or wells drilled for the purpose of exploration or production of oil or gas.

(218) "Wellfield" means two or more drinking water wells, belonging to the same water system that are within 2,500 feet, or as determined by the Authority, and produce from the same and no other aquifer.

(219) "Wellhead Protection." See Drinking Water Protection.

(220) "Wellhead Protection Area (WHPA)." See Drinking Water Protection Area.

(221) "Wellhead Protection Plan." See Drinking Water Protection Plan.

(222) "Wholesale system" means a public water system that treats source water as necessary to produce finished water and then delivers some or all of that finished water to another public water system. Delivery may be through a direct connection or through the distribution system of one or more purchasing water systems.

Stat. Auth.: ORS 448.131

Stats. Implemented: ORS 448.131, 448.150, 448.279, 448.450

333-061-0025

Responsibilities of Water Suppliers

Water suppliers are responsible for taking all reasonable actions to assure that the water delivered to water users does not exceed maximum contaminant levels, to assure that water system facilities are free of public health hazards, and to assure that water system

operation and maintenance are performed as required by these rules. Such actions include, but are not limited to:

(1) Routinely collecting and submitting water samples for laboratory analyses at the frequencies prescribed by OAR 333-061-0036;

(2) Taking immediate corrective action when the results of analyses or measurements indicate that maximum contaminant levels have been exceeded and report the results of these analyses as prescribed by OAR 333-061-0040;

(3) Reporting as prescribed by OAR 333-061-0040, the results of analyses or measurements which indicate that maximum contaminant levels have not been exceeded;

(4) Notifying all customers of the water system and the general public in the service area, as prescribed by OAR 333-061-0042, when the maximum contaminant levels have been exceeded;

(5) Notifying all customers served by the water system, as prescribed by OAR 333-061-0042, when reporting requirements are not being met, when public health hazards are found to exist in the system, or when the operation of the system is subject to a permit or a variance;

(6) Maintaining monitoring and operating records and making these records available for review when the system is inspected;

(7) Maintaining a pressure of at least 20 pounds per square inch (psi) at all service connections at all times;

(8) Following-up on complaints relating to water quality from users and maintaining records and reports on actions undertaken;

(9) Conducting an active program for systematically identifying and controlling cross connections;

(10) Submitting, to the Authority, plans prepared by a professional engineer registered in Oregon for review and approval before undertaking the construction of new water systems or major modifications to existing water systems, unless exempted from this requirement;

(11) Assuring that the water system is in compliance with OAR 333-061-0032 relating to water treatment;

(12) Assuring that the water system is in compliance with OAR 333-061-0210 through OAR 333-061-0272 relating to certification of water system operators; and

(13) Assuring that Transient Non-Community water systems utilizing surface water sources or groundwater sources under the influence of surface water are in compliance with OAR 333-061-0065(2)(c) relating to required special training.

Stat. Auth.: ORS 448.131

Stats. Implemented: ORS 448.123, 448.131, 448.135, 448.150, 448.278, 448.279, 448.450, 448.455, 448.460

333-061-0030
Maximum Contaminant Levels and Action Levels

(1) Maximum contaminant levels (MCLs) and action levels (ALs) for inorganic chemicals apply to all community and non-transient non-community water systems and are listed in Table 1, except the MCL for fluoride which applies only to community water systems and the MCL for nitrate which applies to all water systems.

Table 1

Contaminant	MCL/AL (mg/l);
Antimony	0.006
Arsenic	0.010
Asbestos[1]	7 MFL
Barium	2
Beryllium	0.004
Cadmium	0.005
Chromium	0.1
Copper[2]	1.3
Cyanide	0.2
Fluoride	4.0
Lead[2]	0.015
Mercury	0.002
Nickel	MCL being re-evaluated by EPA
Nitrate (as N)	10
Nitrite (as N)	1
Total Nitrate + Nitrite (as N)	10
Selenium	0.05
Thallium	0.002

[1] MFL = million fibers per liter longer than 10 µm
[2] Action Level (AL)

(a) Compliance with the maximum contaminant levels for inorganic contaminants is calculated pursuant to OAR 333-061-0036(2)(i).

(b) Exceeding the secondary contaminant level for fluoride as specified in section (6) of this rule requires a special public notice as specified in OAR 333-061-0042(7).

(c) The lead action level is exceeded if the concentration of lead in more than 10 percent of tap water samples collected during any monitoring period conducted in accordance with OAR 333-061-0036(2)(c)(A) through (E) is greater than 0.015 mg/L (that is, if the "90th percentile" lead level is greater than 0.015 mg/L). The copper action level is exceeded if the concentration of copper in more than 10 percent of tap water samples collected during any monitoring period conducted in accordance with OAR 333-061-0036(2)(c)(A) through (E) is greater than 1.3 mg/L (that is, if the "90th percentile" copper level is greater than 1.3 mg/L).

(A) The 90th percentile lead and copper levels shall be computed as follows: The results of all lead or copper samples taken during a monitoring period shall be placed in ascending order from the sample with the lowest concentration to the sample with the highest concentration. Each sampling result shall be assigned a number, ascending by single integers beginning with the number 1 for the sample with the lowest contaminant level. The number assigned to the sample with the highest contaminant level shall be equal to the total number of samples taken. The number of samples taken during the monitoring period shall be multiplied by 0.9. The contaminant concentration in the numbered sample yielded by this calculation is the 90th percentile contaminant level.

(B) For water systems serving fewer than 100 people that collect five samples per monitoring period, the 90th percentile is computed by taking the average of the highest and second highest concentrations. For a water system allowed by the Authority to collect fewer than five samples the sample result with the highest concentration is considered the 90th percentile value.

(2) Maximum contaminant levels for organic chemicals:

(a) The maximum contaminant levels for synthetic organic chemicals are shown in Table 2 and apply to all community and non-transient non-community water systems. Compliance with MCLs shall be calculated pursuant to OAR 333-061-0036(3)(a)(H) and (I).

Table 2

Contaminant	MCL, mg/l
Alachlor	0.002
Atrazine	0.003
Benzo(a) pyrene	0.0002
Carbofuran	0.04
Chlordane	0.002
Dalapon	0.2
Dibromochloropropane	0.0002
Dinoseb	0.007
Dioxin(2,3,7,8-TCDD)	0.00000003
Diquat	0.02
Di(2-ethylhexyl) adipate	0.4
Di(2-ethylhexyl) phthalate	0.006
Endothall	0.1
Endrin	0.002
Ethylene Dibromide	0.00005
Glyphosate	0.7
Heptachlor	0.0004
Heptachor epoxide	0.0002
Hexachlorobenzene	0.001
Hexachlorocyclopentadiene	0.05

Lindane	0.0002
Methoxychlor	0.04
Oxamyl(Vydate)	0.2
Picloram	0.5
Polychlorinated Biphenyls	0.0005
Pentachlorophenol	0.001
Simazine	0.004
Toxaphene	0.003
2,4-D	0.07
2,4,5-TP Silvex	0.05

(b) The maximum contaminant levels for disinfection byproducts are shown in Table 3 and apply to all community and non-transient non-community water systems that add a disinfectant (oxidant) to the water supply at any point in the treatment process or deliver water in which a disinfectant has been added to the water supply.

Table 3

Disinfection Byproduct	MCL in mg/l
Total Trihalomethanes (TTHM)	0.080
Haloacetic acids (five)(HAA5)	0.060
Bromate	0.010
Chlorite	1.0

(A) Compliance with the MCLs for TTHM and HAA5 shall be calculated as a locational running annual arithmetic average according to OAR 333-061-0036(4)(c).

(B) Compliance with the MCL for bromate shall be calculated as a running annual arithmetic average pursuant to OAR 333-061-0036(4)(h).

(C) Compliance with the MCL for chlorite shall be calculated as a running annual arithmetic average pursuant to OAR 333-061-0036(4)(g).

(c) The maximum contaminant levels for volatile organic chemicals are indicated in Table 4 and apply to all community and non-transient non-community water systems. Compliance with MCLs shall be calculated pursuant to OAR 333-061-0036(3)(b)(H) and (I).

Table 4

Contaminant	MCL, mg/l
Benzene	0.005
Carbon tetrachloride	0.005
cis-1,2-Dichloroethylene	0.07
Dichloromethane	0.005

Ethylbenzene	0.7
Monochlorobenzene	0.1
o-Dichlorobenzene	0.6
p-Dichlorobenzene	0.075
Styrene	0.1
Tetrachloroethylene(PCE)	0.005
Toluene	1
trans-1,2-Dichloroethylene	0.1
Trichloroethylene (TCE)	0.005
Vinyl chloride	0.002
Xylenes(total)	10
1,1-Dichloroethylene	0.007
1,1,1-Trichloroethane	0.2
1,1,2-Trichloroethane	0.005
1,2-Dichloroethane	0.005
1,2-Dichloropropane	0.005
1,2,4-Trichlorobenzene	0.07

(d) When the Authority has reason to believe that a water supply has been contaminated by a toxic organic chemical, it will determine whether a public health hazard exists and whether control measures must be carried out;

(e) The Authority may establish maximum contaminant levels for additional organic chemicals as deemed necessary when there is reason to suspect that the use of those chemicals will impair water quality to an extent that poses an unreasonable risk to the health of the water users;

(f) Persons who apply pesticides within watersheds above surface water intakes of public water systems shall comply with federal and state pesticide application requirements. (Safe Drinking Water Act (EPA), Clean Water Act (EPA), Federal Insecticide, Fungicide and Rodenticide Act (EPA), ORS 536.220 to 536.360 (Water Resources), 468B.005 (DEQ), 527.610 to 527.990 (DOF), 634.016 to 634.992 (Department of Agriculture)). Any person who has reasonable cause to believe that his or her actions have led to organic chemical contamination of a public water system shall report that fact immediately to the water supplier.

(3) Maximum contaminant levels for turbidity are applicable to all public water systems using surface water sources or groundwater sources under the direct influence of surface water in whole or in part. Compliance with MCLs shall be calculated pursuant to OAR 333-061-0036(5).

(a) The maximum contaminant levels for turbidity at water systems where filtration treatment is not provided are as follows:

(A) The turbidity level cannot exceed 5 NTU in representative samples of the source water immediately prior to the first or only point of disinfectant application unless:

(i) The Authority determines that any such event was caused by circumstances that were unusual and unpredictable; and

(ii) As a result of any such event, there have not been more than two events in the past 12 months the system served water to the public, or more than five events in the past 120 months the system served water to the public, in which the turbidity level exceeded 5 NTU. An "event" is a series of consecutive days during which at least one turbidity measurement each day exceeds 5 NTU. Turbidity measurements must be collected as required by OAR 333-061-0036(5)(a)(B).

(b) Beginning no later than 18 months after the failure to meet the requirements of OAR 333-061-0032(1) through (3), the maximum contaminant levels for turbidity in drinking water measured at a point representing filtered water prior to any storage are as follows:

(A) Conventional filtration treatment or direct filtration treatment.

(i) At water systems where conventional filtration or direct filtration treatment is used, the turbidity level of representative samples of a system's filtered water, measured as soon after filtration as possible and prior to any storage, must be less than or equal to 0.3 NTU in at least 95 percent of the measurements taken each month, measured as specified in OAR 333-061-0036(5).

(ii) At water systems where conventional filtration or direct filtration treatment is used, the turbidity level of representative samples of a system's filtered water, measured as soon after filtration as possible and prior to any storage, must at no time exceed 1 NTU measured as specified in OAR 333-061-0036(5).

(B) Slow sand filtration.

(i) At water systems where slow sand filtration is used, the turbidity level of representative samples of filtered water, measured as soon after filtration as possible and prior to any storage, must be less than or equal to 1 NTU in at least 95 percent of the measurements taken each month, measured as specified in OAR 333-061-0036(5)(b), except that if the Authority determines there is no significant interference with disinfection at a higher turbidity level, the Authority may substitute this higher turbidity limit for that system.

(ii) The turbidity level of representative samples of filtered water must at no time exceed 5 NTU, measured as specified in OAR 333-061-0036(5)(b).

(C) Diatomaceous earth filtration.

(i) At water systems where diatomaceous earth filtration is used, the turbidity level of representative samples of filtered water, measured as soon after filtration as possible and prior to any

storage, must be less than or equal to 1 NTU in at least 95 percent of the measurements taken each month, measured as specified in OAR 333-061-0036(5)(b).

(ii) The turbidity level of representative samples of filtered water must at no time exceed 5 NTU, measured as specified in OAR 333-061-0036(5)(b).

(D) Other filtration technologies. At water systems where filtration technologies other than those listed in paragraphs (3)(b)(A) through (C) of this rule are used, the turbidity level must be less than or equal to 1 NTU in at least 95 percent of the measurements taken each month and at no time exceed 5 NTU, as specified in OAR 333-061-0036(5)(b)(A). The Authority may substitute a lower turbidity value(s) if it is determined that the above limit(s) cannot achieve the required level of treatment. The water supplier must demonstrate to the Authority that the alternative filtration technology in combination with disinfection treatment as specified in OAR 333-061-0032 and monitored as specified by OAR 333-061-0036 consistently achieves 99.9 percent removal or inactivation of *Giardia lamblia* cysts and 99.99 percent removal or inactivation of viruses, and for all of those systems serving at least 10,000 people and beginning January 1, 2005 for all of those systems serving less than 10,000 people, 99 percent removal of *Cryptosporidium* oocysts.

(4) The maximum contaminant level for *E. coli* applies to all public water systems as specified in this section.

(a) A water system exceeds or violates the MCL for *E. coli* if any of the conditions identified in paragraphs (4)(a)(A) through (4)(a)(D) of this rule occur.

(A) An *E. coli*-positive repeat sample follows a total coliform-positive routine sample.

(B) A total coliform-positive repeat sample follows an *E. coli*-positive routine sample.

(C) All required repeat samples are not collected following an *E. coli*-positive routine sample.

(D) Any repeat sample is not analyzed for *E. coli* when it tests positive for total coliform.

(b) Exceeding the MCL for *E. coli* may pose an acute risk to health and requires the distribution of public notification as specified in OAR 333-061-0042.

(5) Maximum contaminant levels for radionuclides are applicable only to community water systems and are indicated in Table 5:

Table 5

Contaminant	MCL
Gross Alpha (including Radium-226 but not Radon and Uranium)	15 pCi/L
Combined Radium-226 and Radium-228	5 pCi/L
Uranium	30 ug/L
Beta/Photon emitters	4 mrem/yr

(a) The average annual concentration of beta particle and photon radioactivity from man-made sources shall not produce an annual dose equivalent to the total body or any internal organ greater than 4 millirem per year according to the criteria listed in the National Bureau of Standards Handbook 69 as amended August, 1963. If two or more radionuclides are present, the sum total of their annual dose equivalent to the total body or to any organ shall not exceed 4 millirem/year.

(A) The average annual concentration of tritium assumed to produce a total body dose of 4 mrem/year is 20,000 pCi/L;

(B) The average annual concentration of strontium-90 assumed to produce a bone marrow dose of 4 mrem/year is 8 pCi/L.

(b) Compliance with the MCLs shall be calculated pursuant to OAR 333-061-0036(7)(c).

(6) Contaminant levels for secondary contaminants are applicable to all public water systems. These are indicated in Table 6. (Also note OAR 333-061-0036(8)).

Table 6

Secondary Contaminant:	Level, mg/l:
Color	15 color units
Corrosivity	Non-corrosive
Foaming agents	0.5
PH	6.5-8.5
Hardness (as CaCO3)	250
Odor	3 threshold odor number
Total dissolved solids(TDS)	500
Aluminum	0.05-0.2
Chloride	250
Copper	1
Fluoride	2.0
Iron	0.3
Manganese	0.05
Silver	0.1
Sulfate	250
Zinc	5

(a) Exceeding the secondary contaminant level for fluoride requires a special public notice as specified in OAR 333-061-0042(7).
(b) Exceeding the maximum contaminant level for fluoride as specified in section (1) of this rule requires public notification as specified in OAR 333-061-0042(2)(b)(A).

(7) Acrylamide and Epichlorohydrin. For every public water system, the water supplier must certify annually to the state in writing, using third party certification approved by the state or manufacturer's certification, that when acrylamide and epichlorohydrin are used in drinking water systems, the combination, or product, of dose and monomer level does not exceed the levels specified as follows:
(a) Acrylamide: 0.05 percent dosed at 1 ppm or equivalent.
(b) Epichlorohydrin: 0.01 percent dosed at 20 ppm or equivalent.

Stat. Auth.: ORS 448.131
Stats. Implemented: ORS 448.131, 448.150

333-061-0031
Maximum Residual Disinfectant Levels

Maximum residual disinfectant levels (MRDLs) are enforceable in the same manner as maximum contaminant levels and are specified in Table 7:

Table 7

Disinfectant Residual:	MRDL in mg/l:
Chlorine	4.0 (as Cl_2)
Chloramines	4.0 (as Cl_2)
Chlorine dioxide	0.8 (as ClO_2)

Stat. Auth.: ORS 448.131
Stats. Implemented: ORS 448.131, 448.150

333-061-0032
Treatment Requirements and Performance Standards

(1) General requirements for all public water systems supplied by a surface water source or a groundwater source under the direct influence of surface water.
(a) These regulations establish criteria under which filtration is required and treatment technique requirements in lieu of maximum contaminant levels for the following contaminants: *Giardia lamblia*, viruses, heterotrophic plate count bacteria, *Legionella*, *Cryptosporidium*, and turbidity. Each public water system with a surface water source or a groundwater source under the direct influence of surface water must provide treatment of that source water that complies with these treatment technique requirements. The treatment technique requirements consist of installing and properly operating water treatment processes which reliably achieve:
(A) At least 99.9 percent (3-log) removal or inactivation of *Giardia lamblia* cysts between a point where the raw water is not subject to

recontamination by surface water runoff and a point downstream before or at the first customer, and

(B) At least 99.99 percent (4-log) removal or inactivation of viruses between a point where the raw water is not subject to recontamination by surface water runoff and a point downstream before or at the first customer.

(C) At least 99 percent (2-log) removal of *Cryptosporidium* between a point where the raw water is not subject to recontamination by surface water runoff and a point downstream before or at the first customer for filtered systems, or *Cryptosporidium* control under the watershed control plan for unfiltered systems; and

(D) Compliance with any applicable disinfection profiling and benchmark requirements as specified in OAR 333-061-0036(4)(l) and OAR 333-061-0060(1)(e).

(E) Sampling and Bin Classification for *Cryptosporidium*:

(i) All water suppliers must conduct an initial and second round of source water monitoring, as prescribed in subsection 333-061-0036(5)(e) of these rules, for each plant that treats a surface water or GWUDI source to determine what level, if any, of additional *Cryptosporidium* treatment they must provide.

(ii) Filtered systems must determine their *Cryptosporidium* treatment bin classification as prescribed in subsection (4)(f) of this rule and provide additional treatment for *Cryptosporidium*, if required, as prescribed in subsection (4)(g) of this rule. All unfiltered systems must provide treatment for *Cryptosporidium* as prescribed in subsections (3)(e) through (g) of this rule. Filtered and unfiltered systems must implement *Cryptosporidium* treatment according to the schedule in paragraph (1)(a)(F) of this rule.

(iii) Systems required to provide additional treatment for *Cryptosporidium* must implement microbial toolbox options that are designed and operated as prescribed in sections (13) through (17) of this rule and in OAR 333-061-0036(5)(c), OAR 333-061-0050(4) and OAR 333-061-0050(5)(k).

(F) Schedule for compliance with *Cryptosporidium* treatment requirements.

(i) Following initial bin classification as prescribed in subsection (4)(f) of this rule, filtered water systems must provide the level of treatment for *Cryptosporidium* required under subsection (4)(g) of this rule according to the schedule in subparagraph (1)(a)(F)(iii) of this rule.

(ii) Following initial determination of the mean *Cryptosporidium* level as prescribed by subsection (2)(c) of this rule, unfiltered water systems must provide the level of treatment for Cryptosporidium required under subsection (3)(e) of this rule according to the schedule in subparagraph (1)(a)(F)(iii) of this rule.

(iii) *Cryptosporidium* treatment compliance dates. The Authority may allow up to an additional two years from the date specified below for water systems making capital improvements.

(I) Water systems that serve at least 100,000 people must comply with *Cryptosporidium* treatment by April 1, 2012.

(II) Water systems that serve from 50,000 to 99,999 people must comply with *Cryptosporidium* treatment by October 1, 2012.

(III) Water systems that serve from 10,000 to 49,999 people must comply with *Cryptosporidium* treatment by October 1, 2013.

(IV) Water systems that serve fewer than 10,000 people must comply with *Cryptosporidium* treatment by October 1, 2014.

(V) State-Regulated public water systems must comply with *Cryptosporidium* treatment by October 1, 2015.

(iv) If the bin classification for a filtered water system changes following the second round of source water monitoring as prescribed in subsection (4)(f) of this rule, the water system must provide the level of treatment for *Cryptosporidium* required by subsection (4)(g) of this rule on a schedule approved by the Authority.

(v) If the mean *Cryptosporidium* level for an unfiltered water system changes following the second round of monitoring as prescribed by paragraph (2)(c)(A) of this rule, the water system must provide the level of *Cryptosporidium* treatment required by subsection (3)(e) of this rule, due to the change, following a schedule approved by the Authority.

(b) A public water system using a surface water source or a ground water source under the direct influence of surface water is considered to be in compliance with the requirements of this rule if:

(A) The system meets the requirements for avoiding filtration in section (2) of this rule and the disinfection requirements in section (3) of this rule, and the disinfection benchmarking requirements of OAR 333-061-0060(1)(e); or

(B) The system meets the filtration requirements in section (4) of this rule and the disinfection requirements in section (5) of this rule and the disinfection benchmarking requirements of OAR 333-061-0060(1)(e).

(c) Water systems that utilize sources that have been determined to be under the direct influence of surface water according to section (8) of this rule have 18 months to meet the requirements of sections (2) and (3) of this rule, or the requirements of sections (4) and (5) of this rule. During that time, the system must meet the following Interim Standards:

(A) The turbidity of water entering the distribution system must never exceed 5 NTU. Turbidity measurements must be taken a minimum of once per day. If continuous turbidimeters are in place, measurements should be taken every four hours; and

(B) Disinfection must be sufficient to reliably achieve at least 1.0 log inactivation of *Giardia lamblia* cysts prior to the first user. Daily disinfection "CT" values must be calculated and recorded daily, including pH and temperature measurements, and disinfection residuals at the first customer.

(C) Reports must be submitted to the Authority monthly as prescribed in OAR 333-061-0040.

(D) If these interim standards are not met, the owner or operator of the water system must notify customers of the failure as required in OAR 333-061-0042(2)(b)(A).

(2) Requirements for public water systems utilizing surface water or GWUDI sources without filtration.

(a) Source water quality conditions.

(A) The fecal coliform concentration must be equal to or less than 20/100 ml, or the total coliform concentration must be equal to or less than 100/100 ml, in samples collected as prescribed by OAR 333-061-0036(5)(a)(A), in at least 90 percent of the measurements made for the 6 previous months that a water system served water to the public on an ongoing basis. If a water supplier measures both fecal and total coliform as specified in this paragraph, only the fecal coliform criterion must be met.

(B) The turbidity level cannot exceed the maximum contaminant level prescribed in OAR 333-061-0030(3)(a)(A).

(b) Site-specific conditions.

(A) Water systems must meet the disinfection requirements as prescribed in section (3) of this rule at least 11 of the 12 previous months that the system served water to the public, on an ongoing basis, unless a system fails to meet the requirements during 2 of the 12 previous months that the system served water to the public, and the Authority

determines that at least one of these failures was caused by circumstances that were unusual and unpredictable.

(B) Water suppliers must maintain a comprehensive watershed control program which minimizes the potential for contamination by *Giardia lamblia* cysts, *Cryptosporidium* oocysts, and viruses in the source water. For water systems using GWUDI, and at the discretion of the Authority, a certified drinking water protection plan (OAR 340-040-0160 to 340-040-0180) that addresses both the groundwater and surface water components of the drinking water supply may be substituted for a watershed control program. The watershed control program shall be developed according to guidelines in OAR 333-061-0075. The public water system must demonstrate through ownership or written agreements with landowners within the watershed that it can control all human activities which may have an adverse impact on the microbiological quality of the source water. The system must submit an annual report to the Authority identifying any special concerns about the watershed, the procedures used to resolve the concern, current activities affecting water quality, and projections of future adverse impacts or activities and the means to address them. At a minimum, the watershed control program must:

(i) Characterize the watershed hydrology and land ownership;

(ii) Identify watershed characteristics and activities which have or may have an adverse effect on source water quality; and

(iii) Monitor the occurrence of activities which may have an adverse effect on source water quality.

(C) Water systems must be subject to an annual on-site inspection of the watershed control program and the disinfection treatment process by the Authority. The on-site inspection must indicate to the Authority's satisfaction that the watershed control program and disinfection treatment process are adequately designed and maintained including the adequacy limiting the potential contamination by *Cryptosporidium* oocysts. The inspection must include:

(i) A review of the effectiveness of the watershed control program;

(ii) A review of the physical condition of the source intake and how well it is protected;

(iii) A review of the system's equipment maintenance program to ensure there is low probability for failure of the disinfection process;

(iv) An inspection of the disinfection equipment for physical deterioration;

(v) A review of operating procedures;

(vi) A review of data records to ensure that all required tests are being conducted and recorded and disinfection is effectively practiced; and

(vii) Identification of any improvements which are needed in the equipment, system maintenance and operation, or data collection.

(D) Water systems must not have been identified by the Authority as the source of waterborne disease outbreak under the system's current configuration. If such an outbreak occurs, the water system's treatment process must be sufficiently modified, as determined by the Authority, to prevent any future such occurrence.

(E) Water systems must meet each of the following conditions on an ongoing basis for at least 11 of the 12 previous months that the water system served water to the public unless the Authority determines that failure to meet this requirement was not caused by a deficiency in treatment of the source water.

(i) The MCL for *E. coli* as prescribed by OAR 333-061-0030(4) was not exceeded at the water system.

(ii) The equivalent to either of the level one coliform investigation triggers specified in OAR 333-061-0078(2)(a)(A) or (B) was not exceeded at the water system prior to March 31, 2016 if applicable.

(F) Water systems must be in compliance with the requirements for total trihalomethanes, haloacetic acids (five), bromate, chlorite, chlorine, chloramines, and chlorine dioxide as specified in OAR 333-061-0036(4).

(c) Determination of mean *Cryptosporidium* level.

(A) Unfiltered water systems must calculate the arithmetic average of all *Cryptosporidium* sample concentrations following completion of the initial and second round of source water monitoring conducted in accordance with OAR 333-061-0036(5)(e). Systems must report this value to the Authority for approval no later than 6 months after the date the system was required to complete the required monitoring.

(B) If the frequency of monthly *Cryptosporidium* sampling varies, water systems must calculate a monthly average for each month of sampling. Systems must then use these monthly average concentrations, rather than individual sample concentrations, in the calculation of the mean *Cryptosporidium* level prescribed in paragraph (2)(c)(A) of this rule.

(C) The report to the Authority of the mean *Cryptosporidium* levels calculated in accordance with paragraph (2)(c)(A) of this rule must

include a summary of the source water monitoring data used for the calculation.

(D) Failure to comply with the conditions of subsection (2)(c) of this rule is a violation of treatment technique requirements.

(d) A public water system which fails to meet any of the criteria in section (2) of this rule is in violation of a treatment technique requirement. The Authority can require filtration to be installed where it determines necessary.

(3) Disinfection requirements for systems utilizing surface water or GWUDI sources without filtration. Each public water system that does not provide filtration treatment must provide disinfection treatment as follows:

(a) The disinfection treatment must be sufficient to ensure at least 99.9 percent (3-log) inactivation of *Giardia lamblia* cysts and 99.99 percent (4-log) inactivation of viruses, every day the system serves water to the public, except any one day each month. Each day a system serves water to the public, the public water system must calculate the CT value(s) from the system's treatment parameters, using the procedure specified in OAR 333-061-0036(5)(a)(C) and determine whether this value(s) is sufficient to achieve the specified inactivation rates for *Giardia lamblia* cysts and viruses. If a system uses a disinfectant other the chlorine, the system must demonstrate to the Authority through the use of an approved protocol for on-site disinfection demonstration studies or other information satisfactory to the Authority that the system is achieving the required inactivation rates on a daily basis instead of meeting the "CT" values in this rule.

(b) Systems for chemical disinfection must have either:

(A) Redundant components, including an auxiliary power supply with automatic start-up and alarm to ensure that disinfectant application is maintained continuously while water is being delivered to the distribution system; or

(B) Automatic shut-off of delivery of water to the distribution system whenever there is less than 0.2 mg/l of residual disinfectant concentration in the water, or if the ultraviolet light system fails. If the Authority determines than automatic shut-off would cause unreasonable risk to health or interfere with fire protection, the system must comply with paragraph (3)(b)(A) of this rule.

(c) The residual disinfectant concentration in the water entering the distribution system, measured as specified in OAR 333-061-0036(5)(a)(E), cannot be less than 0.2 mg/l for more than four hours.

(d) Disinfectant residuals in the distribution system. The residual disinfectant concentration in the distribution system, measured as total chlorine, combined chlorine, or chlorine dioxide, as specified in OAR 333-061-0036(5)(a)(F), cannot be undetectable in more than 5 percent of the samples

each month, for any two consecutive months that the system serves water to the public.

(e) Unfiltered water systems must provide the level of *Cryptosporidium* inactivation specified in this subsection, based on their mean *Cryptosporidium* levels, and determined in accordance with subsection (2)(c) of this rule and according to the schedule in subsection (1)(a) of this rule.

(A) Unfiltered systems with a mean *Cryptosporidium* level of 0.01 oocysts/L or less must provide at least 2-log *Cryptosporidium* inactivation.

(B) Unfiltered systems with a mean *Cryptosporidium* level of greater than 0.01 oocysts/L must provide at least 3-log *Cryptosporidium* inactivation.

(f) Inactivation treatment technology requirements. Unfiltered systems must use chlorine dioxide, ozone, or UV as prescribed by OAR 333-061-0036(5)(c) to meet the *Cryptosporidium* inactivation requirements of this section.

(A) Systems that use chlorine dioxide or ozone and fail to achieve the *Cryptosporidium* inactivation required in subsection (3)(e) of this rule on more than one day in the calendar month are in violation of the treatment technique requirement.

(B) Systems that use UV light and fail to achieve the *Cryptosporidium* inactivation required in subsection (3)(e) of this rule because they do not to meet the criteria specified in subsection (18)(c) of this rule are in violation of the treatment technique requirement.

(g) Use of two disinfectants. Unfiltered water systems must meet the combined *Cryptosporidium* inactivation requirements of subsection (3)(e) of this rule, and the *Giardia lamblia* and virus inactivation requirements of subsection (3)(a) of this rule using a minimum of two disinfectants. Each of the two disinfectants must achieve by itself, the total inactivation required for at least one of the following pathogens: *Cryptosporidium*, *Giardia lamblia*, or viruses.

(4) Requirements for systems utilizing surface water or GWUDI sources that provide filtration:

(a) A public water system that uses a surface water source or a groundwater source under the direct influence of surface water, and does not meet all of the criteria in sections (1), (2), and (3) of this rule for avoiding filtration, violates a treatment technique and must provide treatment consisting of both disinfection, as specified in section (5) of this rule, and filtration treatment which complies with the requirements of either subsection (4)(b), (c), (d), or (e) of this rule by June 29, 1993 or within 18 months of the failure to meet the criteria in section (2) of this rule for avoiding filtration, whichever is

later. Failure to install a required treatment by the prescribed dates is a violation of the treatment technique requirements.

(b) Conventional filtration treatment or direct filtration. Systems using conventional filtration treatment or direct filtration treatment shall meet the turbidity requirements as specified in OAR 333-0061-0030(3)(b)(A)(i) and (ii).

(c) Slow sand filtration. Systems using slow sand filtration treatment shall meet the turbidity requirements prescribed in OAR 333-061-0030(3)(b)(B).

(d) Diatomaceous earth filtration. Systems using diatomaceous earth filtration treatment shall meet the turbidity requirements prescribed in OAR 333-061-0030(3)(b)(C).

(e) Other filtration technologies. Systems using other filtration technologies shall meet the turbidity requirements prescribed in OAR 333-061-0030(3)(b)(D).

(A) GWUDI systems using bank filtration as an alternate filtration technology must meet the requirements listed in section (9) of this rule.

(B) Systems using membrane filtration must conduct continuous indirect integrity testing and daily direct integrity testing in accordance with OAR 333-061-0036(5)(d)(B) and (C).

(f) *Cryptosporidium* Bin classification for filtered water systems. Following completion of the initial round of source water monitoring required by OAR 333-061-0036(5)(e), filtered water systems must calculate an initial *Cryptosporidium* bin concentration for each plant for which monitoring was required. Calculation of the bin concentration must be based upon the *Cryptosporidium* results reported in accordance with OAR 333-061-0036(5)(e), and must comply with paragraphs (4)(f)(A) through (F) of this rule.

(A) For water systems that collect 48 or more samples, the bin concentration is equal to the arithmetic average of all sample concentrations.

(B) For water systems that collect at least 24 samples, but not more than 47 samples, the bin concentration is equal to the highest arithmetic average of all sample concentrations in any 12 consecutive months during which *Cryptosporidium* samples were collected.

(C) For water systems that serve fewer than 10,000 people and only collect *Cryptosporidium* samples for 12 months, that is, collect 24 samples in 12 months, the bin concentration is equal to the arithmetic average of all sample concentrations.

(D) For water systems with plants operating only part of the year, and that monitor fewer than 12 months per year as prescribed by OAR 333-061-0036(5)(e)(E), the bin concentration is equal to the highest

arithmetic average of all sample concentrations during any year of *Cryptosporidium* monitoring.

(E) If the monthly *Cryptosporidium* sampling frequency varies, water systems must first calculate a monthly average for each month of monitoring. Water systems must then use these monthly average concentrations, rather than individual sample concentrations, in the applicable calculation for bin classification of this subsection.

(F) Bin classification table.

(i) Filtered water systems must determine their initial bin classification from Table 8 as follows and using the *Cryptosporidium* bin concentration calculated under subsection (4)(f) of this rule:

Table 8
Bin Classification Table for Filtered Systems

Mean *Cryptosporidium* concentration[1]	Bin Classification
< 0.075 *Cryptosporidium* oocysts/L, including water systems serving fewer than 10,000 people and not required to monitor for *Cryptosporidium* under OAR 333-061-0036(5)(e)(A).	Bin 1
0.075 oocyst/L to < 1.0 oocysts/L	Bin 2
≥ 1.0 oocysts/L to < 3.0 oocysts/L	Bin 3
≥ 3.0 *Cryptosporidium* oocysts/L	Bin 4

[1]Based on calculations as prescribed by paragraphs (4)(f)(A) through (E) of this rule, as applicable.

(ii) Following completion of the second round of source water monitoring required as prescribed by OAR 333-061-0036(5)(e)(B), filtered water systems must recalculate their *Cryptosporidium* bin concentration based upon the sample results reported in accordance with OAR 333-061-0036(5)(e)(B) and following the procedures specified in paragraphs (4)(f)(A) through (D) of this rule. Water systems must then re-determine their bin classification using Table 8 in paragraph (4)(f)(F) of this rule.

(G) Filtered water systems must report their bin classification as prescribed by paragraph (4)(f)(F) of this rule to the Authority for approval no later than 6 months after the system is required to complete the initial and second round of source water monitoring based on the schedule in OAR 333-061-0036(5)(e)(C).

(H) The bin classification report to the Authority must include a summary of source water monitoring data and the calculation procedure used to determine bin classification. Failure to comply with the conditions of this paragraph is a violation of treatment technique requirements.

(g) Additional C*ryptosporidium* treatment requirements.

(A) Filtered water systems must provide the level of additional treatment for *Cryptosporidium* specified in Table 9 based on their bin classification as determined under subsection (4)(f) of this rule, and according to the schedule in paragraph (1)(a)(F) of this rule.

Table 9
Additional *Cryptosporidium* Treatment Requirements:

Bin Classification	Type of Filtration Treatment			
	Conventional Filtration (including softening)	Direct Filtration	Slow Sand or Diatomaceous Earth Filtration	Alternative Filtration Technologies
1	No additional Treatment	No additional Treatment	No additional Treatment	No additional Treatment
2	1-log treatment	1.5-log treatment	1-log treatment	[1]
3	2-log treatment	2.5-log treatment	2-log treatment	[2]
4	2.5-log treatment	3-log treatment	2.5-log treatment	[3]

[1] As determined by the Authority such that the total *Cryptosporidium* removal and inactivation is at least 4.0-log.
[2] As determined by the Authority such that the total *Cryptosporidium* removal and inactivation is at least 5.0-log.
[3] As determined by the Authority such that the total *Cryptosporidium* removal and inactivation is at least 5.5-log.

(B) Filtered water systems must use one or more of the treatment and management options listed in section (13) of this rule, termed the microbial toolbox, to comply with the additional *Cryptosporidium* treatment required by paragraph (4)(g)(A) of this rule.

(C) Systems classified in Bin 3 or Bin 4 must achieve at least 1-log of the additional *Cryptosporidium* treatment, as required by paragraph (4)(g)(A) of this rule, using either one or a combination of the following: bag filters, bank filtration, cartridge filters, chlorine dioxide, membranes, ozone, or UV, as described in sections (14) through (18) of this rule and in OAR 333-061-0036(5)(c).

(i) Failure by a water system, in any month, to achieve the treatment credit required by sections (14) through (18) of this rule and OAR 333-061-0036(5)(c) that is at least equal to the level of treatment required by paragraph (4)(g)(A) of this rule, is a violation of treatment technique requirements.

(ii) If the Authority determines during a sanitary survey or equivalent source water assessment, that after a system completed the monitoring conducted as required by OAR 333-061-0036(5)(e)(A) or (B), significant changes occurred in the

system's watershed that could lead to increased contamination of the source water by *Cryptosporidium*, the system must take action as specified by the Authority to address the contamination. These actions may include additional source water monitoring or implementing microbial toolbox options specified in section (13) of this rule.

(5) Disinfection requirements for systems utilizing surface water or GWUDI sources with filtration:

(a) The disinfection treatment must be sufficient to ensure that the total treatment processes of that system achieve at least 99.9 percent (3-log) inactivation or removal of *Giardia lamblia* cysts and at least 99.99 percent (4-log) inactivation or removal of viruses as determined by the Authority.

(b) The residual disinfectant concentration in the water entering the distribution system, measured as specified in OAR 333-061-0036(5)(b)(D), cannot be less than 0.2 mg/l for more than 4 hours.

(c) The residual disinfectant concentration in the distribution system, measured as total chlorine, combined chlorine, or chlorine dioxide, as specified is OAR 333-061-0036(5)(b)(D) cannot be undetectable in more than 5 percent of the samples each month, for any two consecutive months that the system serves water to the public.

(6) Requirements for water systems using groundwater sources.

(a) Water suppliers responsible for groundwater systems as defined by OAR 333-061-0020(90) must comply with the requirements of this section when a significant deficiency is identified or a groundwater source sample collected according to OAR 333-061-0036(6)(j) is *E. coli* positive. The Authority may require a water supplier to comply with the provisions of this section when a groundwater source sample collected according to OAR 333-061-0036(6)(i) or (k) is *E. coli* positive.

(b) When a significant deficiency is identified at a public water system that uses both groundwater and surface water or groundwater under the direct influence of surface water, the water supplier must comply with provisions of this section except in cases where the Authority determines that the significant deficiency is in a portion of the distribution system that is served solely by surface water or groundwater under the direct influence of surface water.

(c) Water suppliers must consult with the Authority regarding the appropriate corrective action within 30 days of receiving written notice from the Authority of a significant deficiency, written notice from a laboratory that a groundwater source sample collected in accordance with OAR 333-061-0036(6)(j) was *E. coli* -positive, or direction from the Authority that an *E. coli* -positive collected in accordance with OAR 333-061-0036(6)(i) or (k) requires corrective action.

(d) Within 120 days (or earlier if directed by the Authority) of receiving written notification from the Authority of a significant deficiency, written notice from a laboratory that a groundwater source sample collected in accordance with OAR 333-061-0036(6)(j) was found to be *E. coli* positive, or direction from the Authority that a *E. coli* -positive sample collected in accordance with OAR 333-061-0036(6)(i) or (k) requires corrective action, the water supplier must either:

(A) Have completed corrective action in accordance with applicable Authority plan review processes or other Authority guidance, including any Authority-specified interim measures; or

(B) Be in compliance with an Authority approved corrective action plan and schedule subject to the following conditions:

(i) Any subsequent modifications to an approved corrective action plan and schedule must be approved by the Authority; and

(ii) If the Authority specifies interim measures for the protection of public health pending Authority approval of the corrective action plan and schedule, or pending completion of the corrective action plan, the water supplier must comply with these interim measures as well as with any schedule specified by the Authority.

(e) Water suppliers subject to the requirements of this section must, upon approval by the Authority, implement one or more of the following corrective action alternatives:

(A) Correct all significant deficiencies;

(B) Disconnect the groundwater source from the water system and provide an alternate source of water. If a disconnected well is or will be within 100 feet of a public water supply well, the disconnected well must be abandoned in accordance with 333-061-0050(2)(a)(E);

(C) Eliminate the source of contamination; or

(D) Provide treatment for the groundwater source that reliably achieves at least 4-log inactivation, removal, or a combination of inactivation and removal of viruses before or at the first customer. If the groundwater source does not meet all of the applicable construction standards specified in OAR 333-061-0050(2)(a) or (b), and the Authority determines that reconstruction of the groundwater source will add a significant measure of public health protection, then the groundwater source must be made to meet all of the applicable construction standards specified in OAR 333-061-0050(2)(a) or (b) before treatment is applied as prescribed by OAR 333-061-0050(5)(b).

(f) Water suppliers responsible for water systems using fecally contaminated groundwater sources must provide continuous disinfection as prescribed by

OAR 333-061-0050(5) when disinfection is approved by the Authority as a corrective action.

(g) If three or more coliform investigations are triggered within a rolling 12 month period or four or more coliform investigations are triggered within a rolling two year period, water suppliers must install and utilize treatment for disinfectant residual maintenance. For the purposes of this subsection, only coliform investigations triggered as specified in OAR 333-061-0078(2)(a)(A) or (B) or (2)(b)(A) will be considered.

(A) Treatment must be installed and operating within six months unless the Authority approves an alternate schedule.

(B) Disinfectant residuals must be monitored as prescribed by OAR 333-061-0036(9).

(h) A water supplier violates this rule if any of the situations specified in paragraphs (6)(h)(A) through (C) of this rule occur. Violation of this rule is a violation of treatment technique requirements and requires a tier two public notice be published as specified by OAR 333-061-0042.

(A) Within 120 days (or earlier if directed by the Authority) of receiving written notice from the Authority of a significant deficiency, a water supplier:

(i) Fails to complete corrective action in accordance with applicable Authority plan review processes or other Authority guidance, including Authority specified interim actions and measures; or

(ii) Fails to be in compliance with an Authority approved corrective action plan and schedule.

(B) Within 120 days (or earlier if directed by the Authority) of receiving notification of an *E. coli*-positive groundwater source sample collected according to OAR 333-061-0036(6)(j) and not invalidated according to OAR 333-061-0036(6)(l), a water supplier:

(i) Fails to complete corrective action according to applicable Authority plan review processes or other Authority guidance, including interim actions and measures; or

(ii) Fails to be in compliance with an Authority approved corrective action plan and schedule.

(C) A water supplier fails to correct any disruption in treatment within four hours of determining a disruption is occurring at a groundwater system subject to the requirements of subsection (7)(b) of this rule and required to maintain at least 4-log treatment of viruses (using inactivation, removal, or an Authority approved combination of 4-log virus inactivation and removal) before or at the first customer.

(7) Compliance monitoring requirements for groundwater systems that provide at least 4-log treatment of viruses. Water systems must comply with the requirements of (7)(a) through (7)(c) of this rule.

(a) A groundwater system that is not required to meet the source water monitoring requirements of 333-061-0036(6)(i) or (j) of these rules, because it provides at least 4-log treatment of viruses (using inactivation, removal, or an Authority-approved combination of 4-log virus inactivation and removal) before or at the first customer for any groundwater source, must comply with the requirements of this subsection within 30 days of placing the groundwater source in service, whichever is later.

(A) The water system must notify the Authority in writing, that it provides at least 4-log treatment of viruses (using inactivation, removal, or an Authority approved combination of 4-log virus inactivation and removal) before or at the first customer for the groundwater source. Notification to the Authority must include engineering, operational, or other information that the Authority requests to evaluate the submission.

(B) The system must conduct compliance monitoring as required by subsection (7)(b) of this rule.

(C) The system must conduct groundwater source monitoring under OAR 333-061-0036(6) if the system subsequently discontinues 4-log treatment of viruses (using inactivation, removal, or an Authority-approved combination of 4-log virus inactivation and removal) before or at the first customer for the groundwater source.

(b) Monitoring requirements. A groundwater system subject to the requirements of section (6) or subsection (7)(a) of this rule must monitor the effectiveness and reliability of treatment for that groundwater source before or at the first customer as follows:

(A) Chemical Disinfection:

(i) Groundwater systems serving greater than 3,300 people must continuously monitor the residual disinfectant concentration using analytical methods as specified in OAR 333-061-0036(1), at a location approved by the Authority, and must record the lowest residual disinfectant concentration each day that water from the groundwater source is served to the public. The groundwater system must maintain the Authority-determined residual disinfectant concentration every day the groundwater system serves water from the groundwater source to the public. If there is a failure in the continuous monitoring equipment, the groundwater system must conduct grab sampling every four hours until the continuous monitoring equipment is returned to

service. The system must resume continuous residual disinfectant monitoring within 14 days.

(ii) Groundwater systems serving 3,300 or fewer people must monitor the residual disinfectant concentration using analytical methods as specified in OAR 333-061-0036(1), at a location approved by the Authority, and record the residual disinfection concentration each day that water from the groundwater source is served to the public. The groundwater system must maintain the Authority-determined residual disinfectant concentration every day the groundwater system serves water from the groundwater source to the public. The groundwater system must take a daily grab sample during the hour of peak flow or at another time specified by the Authority. If any daily grab sample measurement falls below the Authority-determined residual disinfectant concentration, the groundwater system must take follow-up samples every four hours until the residual disinfectant concentration is restored to the Authority-determined level. Alternately, a groundwater system that serves 3,300 or fewer people may monitor continuously and meet the requirements of subparagraph (7)(b)(A)(i) of this rule.

(B) Membrane filtration. A groundwater system that uses membrane filtration to achieve at least 4-log removal of viruses must monitor and operate the membrane filtration process in accordance with all Authority-specified monitoring and compliance requirements. A groundwater system that uses membrane filtration is in compliance with the requirement to achieve at least 4-log removal of viruses when:

(i) The membrane has an absolute molecular weight cut-off (MWCO), or an alternate parameter describing the exclusion characteristics of the membrane, that can reliably achieve at least 4-log removal of viruses;

(ii) The membrane process is operated in accordance with Authority-specified compliance requirements; and

(iii) The integrity of the membrane is intact as verified per OAR 333-061-0050(4)(c)(I).

(C) Alternative treatment. A groundwater system that uses an Authority-approved alternative treatment to provide at least 4-log treatment of viruses (using inactivation, removal, or an Authority-approved combination of 4-log virus inactivation and removal) before or at the first customer must:

(i) Monitor the alternative treatment in accordance with all Authority-specified monitoring requirements; and

(ii) Operate the alternative treatment in accordance with all compliance requirements that the Authority determines to be necessary to achieve at least 4-log treatment of viruses.

(c) Discontinuing treatment. A groundwater system may discontinue 4-log treatment of viruses (using inactivation, removal, or an Authority-approved combination of 4-log virus inactivation and removal) before or at the first customer for a groundwater source if the Authority determines, and documents in writing, that 4-log treatment of viruses is no longer necessary for that groundwater source. A system that discontinues 4-log treatment of viruses is subject to the source water monitoring requirements of OAR 333-061-0036(6).

(8) Determination of groundwater under the direct influence of surface water (GWUDI)

(a) Except for wells using only a handpump, all groundwater sources must be evaluated for the potential of surface water influence if the source is in proximity to perennial or intermittent surface water and meets one of the hydrogeologic setting-surface water setback criteria identified in paragraph (A) and either paragraph (B) or (C). Hydrogeologic setting is identified by the Source Water Assessment or some other hydrogeologic study approved by the Authority.

(A) The groundwater source draws water from:

(i) A sand aquifer and is within 75 feet of surface water;

(ii) A sand and gravel aquifer and is within 100 feet of surface water;

(iii) A coarse sand, gravel, and boulder aquifer and is within 200 feet of surface water;

(iv) A fractured bedrock aquifer or layered volcanic aquifer and is within 500 feet of surface water; or

(v) Greater distances if geologic conditions or historical monitoring data indicate additional risk at the source; and

(B) There is a history of microbiological contamination in the source; or

(C) The Source Water Assessment or some other hydrogeologic study approved by the Authority determines the source is highly sensitive as a result of aquifer characteristics, vadose zone characteristics, monitoring history or well construction.

(b) Except as provided by subsection (8)(c) of this rule, water suppliers must conduct sampling for any groundwater source(s) meeting the criteria specified in subsection (8)(a) of this rule. Sampling must be conducted according to the following criteria:

(A) Collection of twelve consecutive monthly source water samples when the source is used year-round, or every month the source provides

water to the public during one operational season for water sources used seasonally;

(B) Samples must be analyzed for *E. coli* in accordance with all the applicable provisions of OAR 333-061-0036(1); and

(C) Samples must be collected at the water source prior to any treatment unless the Authority approves an alternate sampling location that is representative of source water quality.

(c) Public water systems that are required to evaluate their source(s) for direct influence of surface water may submit results of a hydrogeologic assessment completed by an Oregon registered geologist or other licensed professional with demonstrated experience and competence in hydrogeology in accordance with ORS 672.505 through 672.705 to demonstrate that the source is not potentially under the direct influence of surface water. The assessment must be consistent with the Oregon State Board of Geologist Examiners "Hydrology Report Guidelines," must be completed within a timeframe specified by the Authority and must include the following:

(A) Well characteristics: well depth, screened or perforated interval, casing seal placement;

(B) Aquifer characteristics: thickness of the vadose zone, hydraulic conductivity of the vadose zone and the aquifer, presence of low permeability zones in the vadose zone, degree of connection between the aquifer and surface water;

(C) Hydraulic gradient: gradient between the aquifer and surface water source during pumping conditions, variation of static water level and surface water level with time; and

(D) Groundwater flow: flow of water from the surface water source to the groundwater source during pumping conditions, estimated time-of-travel for groundwater from the surface water source(s) to the well(s), spring(s), etc.

(d) If a source water sample collected in accordance with subsection (8)(b) of this rule is reported as *E. coli* positive, then the water supplier must collect five additional source water samples within 24 hours of receiving notification of the positive sample result.

(e) If any of the five additional source water samples specified in subsection (8)(d) of this rule is *E. coli* positive then the original *E. coli* positive sample is considered confirmed, and the water supplier must have the groundwater source analyzed for surface water influence according to subsection (8)(h) of this rule. Further *E. coli* monitoring is not required.

(f) A water supplier may be required to have the groundwater source analyzed for surface water influence according to subsection (8)(h) of this rule at the discretion of the Authority if source water samples are consistently total coliform positive.

(g) Emergency groundwater sources that meet the criteria of subsection (8)(a) of this rule can either be evaluated as prescribed in subsection 8(b) or (8)(c) of this rule, or the evaluation can be waived if a Tier 2 public notice as prescribed in OAR 333-061-0042 is issued each time the source is used. The notice must explain that the source has been identified as potentially under the direct influence of surface water, but has not been fully evaluated, and therefore may not be treated sufficiently to inactivate pathogens such as *Giardia lamblia* and *Cryptosporidium*.

(h) Determination of surface water influence on a groundwater source must be based upon a minimum of two samples conducted according to the "Consensus Method for Determining Groundwaters under the Direct Influence of Surface Water Using Microscopic Particulate Analysis (MPA)." Both water samples must be collected during a period of high runoff or streamflow and separated by a period of at least four weeks, or at other times as determined by the Authority. Scoring for diatoms, other algae, and insects/larvae is partially modified according to Table 10. Scoring for *Giardia lamblia*, coccidia, rotifers, and plant debris remains unchanged.

Table 10
Modified Scoring of Microscopic Particulate Analyses

Indicators of Surface Water, Oregon Modified Scoring (counted per 100 gal. water)					
Diatoms		Other Algae		Insects / Larvae	
Abundance	Risk Score	Abundance	Risk Score	Abundance	Risk Score
1-10	6	1-20	4	1-15	3
11-16	7	21-32	5	16-22	4
17-22	8	33-48	6	23-30	5
23-28	9	49-64	7	31-65	6
29-34	10	65-80	8	66-99	7
35-40	11	81-95	9	100-130	8
41-100	12	96-160	10	>130	9
101-149	13	161-220	11		
150-200	14	221-299	12		
201-250	15	300-360	13		
>251	16	>360	14		

EPA Consensus Method Scoring (counted per 100 gal. water)							
Giardia		Coccidia		Rotifers		Plant Debris	
Abundance	Risk Score	Abundance	Risk Score	Abundance	Risk Score	Abundance	Risk Score
1-5	20	1-5	20	1-20	1	1-25	0
6-15	25	6-15	25	21-60	2	26-70	1
16-30	30	16-30	30	61-149	3	71-200	2
>30	40	>30	35	>150	4	>200	3

(i) A water source will be classified as groundwater or GWUDI as follows:

(A) If the two initial microscopic particulate analyses have a risk score of less than 10, the water system source is classified as groundwater;

(B) If any microscopic particulate analysis (MPA) risk score is greater than 19, or each risk score is greater than 14, the water source is classified as GWUDI;

(C) If at least one of the two MPA risk scores is between 10 and 19, two additional microscopic particulate analyses must be conducted, and water source classification will be made as follows:

(i) If all of the MPA risk scores are less than 15, the water system source is classified as groundwater;

(ii) If any MPA risk score is greater than 19, or two or more are greater than 14, the water system source is classified as under the direct influence of surface water; or

(iii) If only one of four MPA risk scores is greater than 14, two additional microscopic particulate analyses must be conducted, and water source classification will be based upon further evaluation by the Authority.

(j) If an infiltration gallery, Ranney well, or dug well has been classified as groundwater under this rule, the turbidity of the source must be monitored and recorded daily and kept by the water system operator. If the turbidity exceeds 5 NTU or if the surface water body changes course such that risk to the groundwater source is increased, an MPA must be conducted at that time. Reevaluation may be required by the Authority at any time.

(k) The Authority may determine a groundwater source to be under the direct influence of surface water if the criteria in subsection (8)(a) of this rule are met and there are significant or relatively rapid shifts in groundwater characteristics, such as turbidity, which closely correlate to changes in weather or surface water conditions.

(l) The Authority may require reevaluation of a groundwater source, as specified in this section, if geologic conditions, water quality trends, or other indicators change despite any data previously collected or any determination previously made.

(m) The Authority may determine that a source is not under direct influence of surface water based on criteria other than MPAs including the Source Water Assessment, source water protection, and other water quality parameters. The determination shall be based on the criteria indicating that the water source has a very low susceptibility to contamination by parasites, including *Giardia lamblia* and *Cryptosporidium*. The Authority may impose additional monitoring or disinfection treatment requirements to ensure that the risk remains low.

(9) Requirements for groundwater sources under the direct influence of surface water seeking alternative filtration credit through bank filtration:

(a) Water systems with all MPA risk scores less than 30 may choose the option to evaluate for bank filtration credit. The water system must conduct a demonstration of performance study that includes an assessment of the ability of the local hydrogeologic setting to provide a minimum of 2-log reduction in the number of particles and microorganisms in the *Giardia* and *Cryptosporidium* size range between surface water and the groundwater source. The bank filtration study must include the following elements or other Authority approved methods:

(A) The bank filtration study must involve the collection of data on removal of biological surrogates and particles in the *Cryptosporidium* size range of 2–5 microns or other surrogates approved by the Authority, and related hydrogeologic and water quality parameters during the full range of operating conditions. The demonstration study methods shall be reviewed and approved by the Authority prior to implementation. Final assessment of removal credit granted to the well shall be made by the Authority based on the study results.

(b) If a GWUDI system using bank filtration as an alternative filtration technology violates the MCL for turbidity specified in OAR 333-061-0030(3)(b)(D), the water system must investigate the cause of the high turbidity within 24 hours of the exceedance. Pending the results of the investigation by the water system, the Authority may require a new bank filtration study.

(10) Disinfection Byproduct Control Requirements:

(a) This rule establishes criteria under which community water systems and Non-transient, Non-community water systems which add a chemical disinfectant to the water in any part of the drinking water treatment process must modify their practices to meet MCLs and MRDLs in OAR 333-061-0030 and 0031, respectively. This rule also establishes the treatment technique requirements for disinfection byproduct precursors, and the criteria under which transient non-community water systems that use chlorine dioxide as a disinfectant or oxidant must modify their practices to meet the MRDL for chlorine dioxide as specified in OAR 333-061-0031.

(b) Water systems may increase residual disinfectant levels in the distribution system of chlorine or chloramines (but not chlorine dioxide) to a level and for a time necessary to protect public health, to address specific microbiological contamination problems caused by circumstances such as, but not limited to, distribution line breaks, storm run-off events, source water contamination events, or cross connection events.

(c) Enhanced coagulation or enhanced softening are authorized treatment techniques to control the level of disinfection byproduct precursors for water

systems using surface water or groundwater under the direct influence of surface water and conventional filtration treatment. Community and Non-transient Non-community water systems using conventional filtration treatment must operate with enhanced coagulation or enhanced softening to achieve the total organic carbon (TOC) percent removal levels specified in subsection (10)(d) of this rule unless the system meets at least one of the alternative compliance criteria listed in paragraph (10)(c)(A) or (10)(c)(B) of this rule.

(A) Alternative compliance criteria for enhanced coagulation and enhanced softening systems. Water systems may use the alternative compliance criteria in subparagraphs (10)(c)(A)(i) through (vi) of this rule in lieu of complying with the performance criteria specified in subsection (e) of this section. Systems must still comply with monitoring requirements specified in OAR 333-061-0036(4)(k).

(i) The system's source water TOC level is less than 2.0 mg/L, calculated quarterly as a running annual average.

(ii) The system's treated water TOC level is less than 2.0 mg/L, calculated quarterly as a running annual average.

(iii) The system's source water TOC is less than 4.0 mg/L, calculated quarterly as a running annual average; the source water alkalinity is greater than 60 mg/L (as CaCO3 calculated quarterly as a running annual average; and the TTHM and HAA5 running annual averages are no greater than 0.040 mg/L and 0.030 mg/L, respectively.

(iv) The TTHM and HAA5 running annual averages are no greater than 0.040 mg/L and 0.030 mg/L, respectively, and the system uses only chlorine for primary disinfection and maintenance of a residual in the distribution system.

(v) The system's source water SUVA, prior to any treatment and measured monthly is less than or equal to 2.0 L/mg-m, calculated quarterly as a running annual average.

(vi) The system's finished water SUVA, measured monthly is less than or equal to 2.0 L/mg-m, calculated quarterly as a running annual average.

(B) Additional alternative compliance criteria for softening systems. Systems practicing enhanced softening that cannot achieve the TOC removals required by paragraph (10)(d)(B) of this rule may use the alternative compliance criteria in subparagraphs (10)(c)(B)(i) and (ii) of this rule in lieu of complying with subsection (10)(d) of this rule. Systems must still comply with monitoring requirements in specified in OAR 333-061-0036(4)(k).

(i) Softening that results in lowering the treated water alkalinity to less than 60 mg/L (as CaCO3), measured monthly and calculated quarterly as a running annual average.

(ii) Softening that results in removing at least 10 mg/L of magnesium hardness (as CaCO3), measured monthly and calculated quarterly as a running annual average.

(d) Enhanced coagulation and enhanced softening performance requirements.

(A) Systems must achieve the percent reduction of TOC specified in paragraph (10)(d)(B) in this rule between the source water and the combined filter effluent, unless the Authority approves a system's request for alternate minimum TOC removal (Step 2) requirements under paragraph (10)(d)(C) of this rule.

(B) Required Step 1 TOC reductions, specified in Table 11, are based upon specified source water parameters. Systems practicing softening are required to meet the Step 1 TOC reductions in the far-right column (Source water alkalinity >120 mg/L) for the specified source water TOC:

Table 11
Step 1 Required Removal (in percent) of TOC by Enhanced Coagulation and Enhanced Softening for Systems Using Conventional Treatment[1, 2]

Source-water TOC, mg/L	Source-water alkalinity, mg/L as $CaCO_3$		
	0-60	61-120	>120[3]
>2.0-4.0	35.0	25.0	15.0
>4.0-8.0	45.0	35.0	25.0
>8.0	50.0	40.0	30.0

[1] Systems meeting at least one of the conditions in subparagraphs (d)(A)(i)-(vi) of this section are not required to operate with enhanced coagulation.

[2] Softening systems meeting one of the alternative compliance criteria in paragraph (d)(B) of this section are not required to operate with enhanced softening.

[3] Systems practicing softening must meet the TOC removal requirements in this column.

(C) Water systems that cannot achieve the Step 1 TOC removals required by paragraph (10)(d)(B) of this rule due to water quality parameters or operational constraints must apply to the Authority, within three months of failure to achieve the TOC removals required by paragraph (10)(d)(B) of this rule, for approval of alternative minimum TOC (Step 2) removal requirements submitted by the water system. If the Authority approves the alternative minimum TOC removal (Step 2) requirements, the Authority may make those requirements retroactive for the purposes of determining compliance. Until the Authority approves the alternate minimum TOC removal (Step 2) requirements, the water system must meet the Step 1 TOC removals contained in paragraph (10)(d)(B) of this rule.

(D) Alternate minimum TOC removal (Step 2) requirements. Applications made to the Authority by enhanced coagulation systems for approval of alternative minimum TOC removal (Step 2) requirements under paragraph (10)(d)(C) of this rule must include, as a minimum, results of bench-scale or pilot-scale testing conducted under subparagraph (10)(d)(D)(i) of this rule. The submitted bench-scale or pilot scale testing must be used to determine the alternate enhanced coagulation level.

(i) Alternate enhanced coagulation level is defined as coagulation at a coagulant dose and pH as determined by the method described in subparagraphs (10)(d)(D)(i) through (v) of this rule such that an incremental addition of 10 mg/L of alum (or equivalent amount of ferric salt) results in a TOC removal of less than or equal to 0.3 mg/ L. The percent removal of TOC at this point on the "TOC removal versus coagulant dose" curve is then defined as the minimum TOC removal required for the system. Once approved by the Authority, this minimum requirement supersedes the minimum TOC removal required by the Table 11 in paragraph (10)(d)(B) of this rule. This requirement will be effective until such time as the Authority approves a new value based on the results of a new bench-scale and pilot-scale test. Failure to achieve Authority-set alternative minimum TOC removal levels is a violation.

(ii) Bench-scale or pilot-scale testing of enhanced coagulation must be conducted by using representative water samples and adding 10 mg/L increments of alum (or equivalent amounts of ferric salt) until the pH is reduced to a level less than or equal to the enhanced coagulation Step 2 target pH as specified in Table 12:

Table 12
Enhanced Coagulation Step 2 Target pH

Alkalinity (mg/L as $CaCO_3$)	Target pH
0-60	5.5
>60-120	6.3
>120-240	7.0
>240	7.5

(iii) For waters with alkalinities of less than 60 mg/L for which addition of small amounts of alum or equivalent addition of iron coagulant drives the pH below 5.5 before significant TOC removal occurs, the system must add necessary chemicals to maintain the pH between 5.3 and 5.7 in samples until the TOC removal of 0.3 mg/L per 10 mg/L alum added (or equivalent addition of iron coagulant) is reached.

(iv) The system may operate at any coagulant dose or pH necessary, consistent with these rules to achieve the minimum TOC percent removal approved under paragraph (10)(d)(C) of this rule.

(v) If the TOC removal is consistently less than 0.3 mg/L of TOC per 10 mg/L of incremental alum dose at all dosages of alum (or equivalent addition of iron coagulant), the water is deemed to contain TOC not amenable to enhanced coagulation. The water system may then apply to the Authority for a waiver of enhanced coagulation requirements.

(e) Compliance calculations.

(A) Water systems other than those identified in paragraphs (10)(c)(A) or (d)(B) of this rule must comply with requirements contained in paragraph (10)(d)(B) or (C) of this rule. Systems must calculate compliance quarterly, beginning after the system has collected 12 months of data, by determining an annual average using the following method:

(i) Determine actual monthly TOC percent removal, equal to: {1-(treated water TOC/source water TOC)}x100

(ii) Determine the required monthly TOC percent removal (from either Table 11 in paragraph (10)(d)(B) of this rule or from paragraph (10)(d)(C) of this rule).

(iii) Divide the value in subparagraph (10)(e)(A)(i) of this rule by the value in subparagraph (10)(e)(A)(ii) of this rule.

(iv) Add together the results of subparagraph (10)(e)(A)(iii) of this rule for the last 12 months and divide by 12.

(v) If the value calculated in subparagraph (10)(e)(A)(iv) of this rule is less than 1.00, the water system is not in compliance with the TOC percent removal requirements.

(B) Water systems may use the provisions in subparagraphs (10)(e)(B)(i) through (v) of this rule in lieu of the calculations in subparagraph (10)(e)(A)(i) through (v) of this rule to determine compliance with TOC percent removal requirements.

(i) In any month that the water system's treated or source water TOC level is less than 2.0 mg/L, the water system may assign a monthly value of 1.0 (in lieu of the value calculated in subparagraph (10)(e)(A)(iii) of this rule) when calculating compliance under the provisions of paragraph (10)(e)(A) of this rule.

(ii) In any month that a system practicing softening removes at least 10 mg/L of magnesium hardness (as CaCO3), the water system may assign a monthly value of 1.0 (in lieu of the value

calculated in subparagraph (10)(e)(A)(iii) of this rule) when calculating compliance under the provisions of paragraph (10)(e)(A) of this rule.

(iii) In any month that the water system's source water SUVA, prior to any treatment is less than or equal to 2.0 L/mg-m, the water system may assign a monthly value of 1.0 (in lieu of the value calculated in subparagraph (10)(e)(A)(iii) of this rule) when calculating compliance under the provisions of paragraph (10)(e)(A) of this rule.

(iv) In any month that the water system's finished water SUVA is less than or equal to 2.0 L/mg-m, the system may assign a monthly value of 1.0 (in lieu of the value calculated in subparagraph (10)(e)(A)(iii) of this rule) when calculating compliance under the provisions of paragraph (10)(e)(A) of this rule.

(v) In any month that a system practicing enhanced softening lowers alkalinity below 60 mg/L (as CaCO3), the water system may assign a monthly value of 1.0 (in lieu of the value calculated in subparagraph (10)(e)(A)(iii) of this rule) when calculating compliance under the provisions of paragraph (10)(e)(A) of this rule.

(C) Water systems using conventional treatment may also comply with the requirements of this section by meeting the criteria in paragraph (10)(c)(A) or (B) of this rule.

(11) Requirements for Water Treatment Plant Recycled Water

(a) Any water system using surface water or groundwater under the direct influence of surface water that uses conventional filtration treatment or direct filtration treatment and that recycles spent filter backwash water, thickener, supernatant, or liquids from dewatering processes must meet the requirements of subsections (11)(b) and (c) of this rule and OAR 333-061-0040(2)(i).

(b) A water system must notify the Authority in writing by December 8, 2003 if that water system recycles spent filter backwash water, thickener supernatant, or liquids from dewatering processes. This notification must include, at a minimum, the information specified in paragraphs (11)(b)(A) and (B) of this rule.

(A) A water treatment plant schematic showing the origin of all flows which are recycled (including, but not limited to, spent filter backwash water, thickener supernatant, and liquids from dewatering processes), the hydraulic conveyance used to transport them, and the location where they are re-introduced back into the water treatment plant.

(B) Typical recycle flow in gallons per minute (gpm), the highest observed water treatment plant flow experienced in the previous year (gpm), the design flow for the water treatment plant (gpm), and the operating capacity of the water treatment plant (gpm) that has been determined by the Authority where the Authority has made such determinations.

(c) Any water system that recycles spent filter backwash water, thickener supernatant, or liquids from dewatering processes must return these flows through the processes of a system's existing conventional filtration treatment plant or direct filtration treatment plant as defined by these rules or at an alternate location approved by the Authority by June 8, 2004. If capital improvements are required to modify the recycle location to meet this requirement, all capital improvements must be completed no later than June 8, 2006.

(12) Water systems using uncovered finished water storage facilities must comply with the conditions of either subsections (12)(a) or (b) of this rule for each uncovered finished water storage facility, or be in compliance with an Authority approved schedule to meet these conditions no later than April 1, 2009.

(a) Water systems must cover any uncovered finished water storage facility; or

(b) Treat the discharge from the uncovered finished water storage facility into the distribution system to achieve at least 4-log virus, 3-log *Giardia lamblia*, and 2-log *Cryptosporidium* inactivation or removal using a protocol approved by the Authority.

(c) Failure to comply with the requirements of this section is a violation of the treatment technique requirement.

(13) Summary and General Requirements of Microbial toolbox options for meeting *Cryptosporidium* treatment requirements. Filtered water systems are eligible for the treatment credits listed in Table 13 of this section by meeting the conditions for microbial toolbox options described in sections (14) through (18) of this rule and in OAR 333-061-0036(5)(c). Unfiltered water systems are eligible only for the treatment credits specified as inactivation toolbox options in Table 13. Water systems apply these treatment credits to meet the requirements of subsections (3)(e) or (4)(g) of this rule, as applicable.

Table 13
Microbial Toolbox Options

Toolbox Option	Crypto treatment credit with design and implementation criteria summary
Source Protection and Management Toolbox Options	
Watershed Control Program	0.5-log credit for Authority approved program including the required elements, an annual program status report to the Authority, and regular watershed surveys. Specific criteria are in subsection (14)(a) of this rule.

Alternative source/intake management	No prescribed credit. Systems must conduct simultaneous monitoring for treatment bin classification at alternative intake locations or using alternative intake management strategies. Specific criteria are in subsection (14)(b) of this rule.
Pre Filtration Toolbox Options	
Presedimentation basin with coagulation	0.5-log credit during any month that presedimentation basins achieve a monthly mean 0.5-log or greater reduction of turbidity, or alternative Authority approved performance criteria. To be eligible, basins must be operated continuously with coagulant addition and all plant flow must pass through the basins. Specific criteria are in subsection (15)(a) of this rule.
Two-stage lime softening	0.5-log credit for two-stage softening where chemical addition and hardness precipitation occur in both stages. All plant flow must pass through both stages. Single-stage softening is credited as equivalent to conventional treatment. Specific criteria are in subsection (15)(b) of this rule.
Bank filtration	0.5-log credit for 25-foot setback; 1.0-log credit for 50-foot setback; aquifer must be unconsolidated sand containing at least 10 percent fines; average turbidity in wells must be less than 1 NTU. Water systems using wells followed by filtration must sample at the well to determine bin classification when conducting source water monitoring, and are not eligible for additional credit. Specific criteria are in subsection (15)(c) of this rule.
Treatment Performance Toolbox Options	
Combined filter performance	0.5-log credit for combined filter effluent turbidity less than or equal to 0.15 NTU in at least 95 percent of measurements each month. Specific criteria are in subsection (16)(a) of this rule.
Individual filter performance	0.5-log credit if individual filter effluent turbidity is less than or equal to 0.15 NTU in at least 95 percent of samples each month in each filter and is never greater than 0.3 NTU in two consecutive measurements in any filter. This credit is cumulative to the 0.5-log combined filter performance credit. Specific criteria are in subsection (16)(b) of this rule.
Demonstration of performance	Credit awarded to unit process or treatment train based on a demonstration to the Authority with an Authority approved protocol. Specific criteria are in subsection (16)(c) of this rule.
Additional Filtration Toolbox Options	
Bag or cartridge filters (individual filters)	Up to 2-log credit based on the removal efficiency demonstrated during challenge testing with a 1.0-log factor of safety. Specific criteria are in subsection (17)(a) of this rule.
Bag or cartridge filters (in series)	Up to 2.5-log credit based on the removal efficiency demonstrated during challenge testing with a 0.5-log factor of safety. Specific criteria are in subsection (17)(a) of this rule.
Membrane filtration	Log credit equivalent to removal efficiency demonstrated in challenge test for device if supported by direct integrity testing. Specific criteria are in subsection (17)(b) of this rule.

Second stage filtration	0.5-log credit for second separate granular media filtration stage if treatment train includes coagulation prior to first filter. Specific criteria are in subsection (17)(c) of this rule.
Slow sand filters	2.5-log credit as a secondary filtration step; 3.0-log credit as a primary filtration process. No prior chlorination for either option. Specific criteria are in subsection (17)(d) of this rule.

Inactivation Toolbox Options

Chlorine dioxide	Log credit based on measured CT in relation to CT table. Specific criteria in OAR 333-061-0036(5)(c).
Ozone	Log credit based on measured CT in relation to CT table. Specific criteria in OAR 333-061-0036(5)(c).
UV	Log credit based on validated UV dose in relation to UV dose table; reactor validation testing required to establish UV dose and associated operating conditions. Specific criteria in OAR 333-061-0036(5)(c).

(14) Source toolbox components for meeting *Cryptosporidium* treatment requirements.

(a) Watershed control program. Water systems receive 0.5-log *Cryptosporidium* treatment credit for implementing a watershed control program that meets the requirements of this subsection.

(A) Water systems must notify the Authority of the intent to apply for the watershed control program credit no later than two years prior to the treatment compliance date applicable to the system in subsection (1)(a) of this rule.

(B) Water systems must submit a proposed watershed control plan to the Authority no later than one year before the applicable treatment compliance date in subsection (1)(a) of this rule. The Authority must approve the watershed control plan for the water system to receive the applicable treatment credit. The watershed control plan must include the following elements:

(i) Identification of an area of influence, outside of which the likelihood of *Cryptosporidium* or fecal contamination affecting the treatment plant intake is not significant. This is the area to be evaluated in future watershed surveys under subparagraph (14)(a)(E)(ii) of this rule;

(ii) Identification of both potential and actual sources of *Cryptosporidium* contamination, and an assessment of the relative impact of these contamination sources on the water system's source water quality;

(iii) An analysis of the effectiveness and feasibility of control measures that could reduce *Cryptosporidium* loading from sources of contamination to the system's source water; and

(iv) A statement of goals and specific actions the system will undertake to reduce source water *Cryptosporidium* levels. The

plan must explain how the actions are expected to contribute to specific goals, identify watershed partners and their roles, identify resource requirements and commitments, and include a schedule for plan implementation with deadlines for completing specific actions identified in the plan.

(C) Water Systems with existing watershed control programs are eligible to seek this credit, but must meet the requirements prescribed in paragraph (14)(a)(B) of this rule, and must specify ongoing and future actions that will reduce source water *Cryptosporidium* levels.

(D) If the Authority does not respond to a water system regarding approval of a watershed control plan submitted in accordance with this section, and the system meets the other requirements of this section, the watershed control program will be considered approved and a 0.5 log *Cryptosporidium* treatment credit will be awarded unless the Authority subsequently withdraws such approval.

(E) Water systems must complete the actions specified in this paragraph to maintain the 0.5-log credit.

(i) Water systems must submit an annual watershed control program status report to the Authority. The status report must describe the water system's implementation of the approved plan, and assess the adequacy of the plan to meet its goals. It must explain how the water system is addressing any deficiencies in plan implementation, including those previously identified by the Authority, or as the result of the watershed survey conducted in accordance with subparagraph (14)(a)(E)(ii) of this rule. The watershed control program status report must also describe any significant changes that have occurred in the watershed since the last watershed sanitary survey.

(ii) Water systems must undergo a watershed sanitary survey every three years for community water systems and every five years for non-community water systems and submit the survey report to the Authority. The survey must be conducted according to Authority guidelines and by persons the Authority approves.

(I) The watershed sanitary survey must meet the following criteria: encompass the region identified in the Authority approved watershed control plan as the area of influence; assess the implementation of actions to reduce source water *Cryptosporidium* levels; and identify any significant new sources of *Cryptosporidium*.

(II) If the Authority determines that significant changes may have occurred in the watershed since the previous

watershed sanitary survey, water systems must undergo another watershed sanitary survey by a date determined by the Authority regardless of the regular date specified in subparagraph (14)(a)(E)(ii) of this rule.

(iii) The water system must make the watershed control plan, annual status reports, and watershed sanitary survey reports available to the public upon request. These documents must be in a plain language style and include criteria by which to evaluate the success of the program in achieving plan goals. The Authority may approve withholding portions of the annual status report, watershed control plan, and watershed sanitary survey from the public based on water supply security considerations.

(F) If the Authority determines that a water system is not implementing the approved watershed control plan, the Authority may withdraw the watershed control program treatment credit.

(G) If a water system determines, during implementation, that making a significant change to its approved watershed control program is necessary, the system must notify the Authority prior to making any such changes. If any change is likely to reduce the level of source water protection, the system must notify the Authority of the actions the water system will take to mitigate this effect.

(b) Alternative source. A water system may conduct source water monitoring that reflects a different intake location (either in the same source or from an alternate source), or a different procedure for the timing or level of withdrawal from the source. If the Authority approves, a system may determine its bin classification under subsection (4)(f) of this rule based on the alternative source monitoring results.

(A) If a water system conducts alternative source monitoring as prescribed by this subsection, the water system must also monitor their current plant intake concurrently as prescribed by OAR 333-061-0036(5)(e).

(B) Alternative source monitoring as prescribed by this subsection must meet the requirements for source monitoring to determine bin classification, as described in OAR 333-061-0036(1), OAR 333-061-0036(5)(e) through (g), and OAR 333-061-0040(1)(o). Water systems must report the alternative source monitoring results to the Authority, including supporting information that documents the operating conditions under which the samples were collected.

(C) If a system determines its bin classification according to subsection (4)(f) of this rule using alternative source monitoring results that reflect a different intake location or a different procedure for managing the timing or level of withdrawal from the source, the system must relocate the intake or permanently adopt the withdrawal

procedure, as applicable, no later than the applicable treatment compliance date in subsection (1)(a) of this rule.

(15) Pre-filtration treatment toolbox components for meeting *Cryptosporidium* treatment requirements.

(a) Presedimentation. Systems receive 0.5-log *Cryptosporidium* treatment credit for a presedimentation basin during any month the process meets the criteria specified in this paragraph:

(A) The presedimentation basin must be in continuous operation, and must treat the entire plant flow taken from a surface water or GWUDI source;

(B) The water system must continuously add a coagulant to the presedimentation basin; and

(C) The presedimentation basin must achieve the performance criteria specified in this paragraph.

(i) The basin must demonstrate at least 0.5-log mean reduction of influent turbidity. This reduction must be determined using daily turbidity measurements of the presedimentation process influent and effluent, and must be calculated as follows: $\log_{10}$(monthly mean of daily influent turbidity)-$\log_{10}$(monthly mean of daily effluent turbidity).

(ii) The basin must also comply with Authority-approved performance criteria that demonstrates at least 0.5-log mean removal of micron-sized particulate material through the presedimentation process.

(b) Two-stage lime softening. Systems receive an additional 0.5-log *Cryptosporidium* treatment credit for a two-stage lime softening plant if chemical addition and hardness precipitation occur in two separate and sequential softening stages prior to filtration. Both softening stages must treat the entire plant flow taken from a surface water or GWUDI source.

(c) Bank filtration. Water systems receive *Cryptosporidium* treatment credit for bank filtration that serves as pretreatment to a filtration plant by meeting the criteria specified in this section. Water systems using bank filtration when they begin source water monitoring according to OAR 333-061-0036(5)(e) must collect samples as prescribed by OAR 333-061-0036(5)(g) and are not eligible for this credit.

(A) Wells with a groundwater flow path of at least 25 feet receive 0.5-log treatment credit. Wells with a groundwater flow path of at least 50 feet receive 1.0-log treatment credit. The groundwater flow path must be determined as specified in paragraph (D) of this subsection.

(B) Only wells in granular aquifers are eligible for treatment credit. Granular aquifers are those comprised of sand, clay, silt, rock fragments, pebbles or larger particles, and minor cement. A water

system must characterize the aquifer at the well site to determine aquifer properties.

(i) Water systems must extract a core from the aquifer and demonstrate that in at least 90 percent of the core length, grains less than 1.0 mm in diameter constitute at least 10 percent of the core material.

(C) Only horizontal and vertical wells are eligible for treatment credit.

(D) For vertical wells, the groundwater flow path is the measured distance from the edge of the surface water body under high flow conditions (as determined by the 100 year floodplain elevation boundary or by the floodway, as defined in Federal Emergency Management Agency flood hazard maps) to the well screen. For horizontal wells, the groundwater flow path is the measured distance from the bed of the river under normal flow conditions to the closest horizontal well lateral screen.

(E) Water systems must monitor each wellhead for turbidity at least once every four hours while the bank filtration process is in operation. If monthly average turbidity levels, based on daily maximum values in the well, exceed 1 NTU, the system must report this result to the Authority and conduct an assessment within 30 days to determine the cause of the high turbidity levels in the well. If the Authority determines that microbial removal has been compromised, the Authority may revoke treatment credit until the water system implements Authority-approved corrective actions to remediate the problem.

(F) Springs and infiltration galleries are not eligible for treatment credit under this section, but are eligible for a treatment credit in accordance with subsection (16)(c) of this rule.

(G) Bank filtration demonstration of performance. The Authority may approve *Cryptosporidium* treatment credit for bank filtration based on a demonstration of performance study that meets the criteria in this paragraph. This treatment credit may be greater than 1.0-log and may be awarded to bank filtration that does not meet the criteria in (15)(c)(A) through (E) of this rule.

(i) The study must follow an Authority approved protocol, and must include the collection of data on the removal of *Cryptosporidium* or a surrogate for *Cryptosporidium* and related hydrogeologic and water quality parameters during the full range of operating conditions.

(ii) The study must include sampling from both the production well(s) and monitoring wells that are screened and located

along the shortest flow path between the surface water source and the production well(s).

(16) Treatment performance toolbox components for meeting *Cryptosporidium* treatment requirements.

(a) Combined filter performance. Water systems using conventional filtration treatment or direct filtration treatment receive an additional 0.5-log *Cryptosporidium* treatment credit during any month that the water system meets the criteria in this subsection. Combined filter effluent (CFE) turbidity must be less than or equal to 0.15 NTU in at least 95 percent of the measurements. Turbidity must be measured as described in OAR 333-061-0036(5)(a)(B).

(b) Individual filter performance. Water systems using conventional filtration treatment or direct filtration treatment receive 0.5-log *Cryptosporidium* treatment credit, which can be in addition to the 0.5-log credit under subsection (16)(a) of this rule, during any month the system meets the criteria in this subsection. Compliance with this criteria must be based on individual filter turbidity monitoring as described in OAR 333-061-0036(5)(d).

(A) The filtered water turbidity for each individual filter must be less than or equal to 0.15 NTU in at least 95 percent of the measurements recorded each month.

(B) No individual filter may have a measured turbidity greater than 0.3 NTU in two consecutive measurements taken 15 minutes apart.

(C) Any system that has received treatment credit for individual filter performance and fails to meet the requirements of paragraphs (16)(b)(A) or (B) of this rule, during any month, is in violation of treatment technique requirements as prescribed by subsection (4)(g) of this rule unless the Authority determines the following:

(i) The failure was due to unusual and short-term circumstances that could not reasonably be prevented through optimizing treatment plant design, operation, or maintenance; and

(ii) The system has experienced no more than two such failures in any calendar year.

(c) Demonstration of performance. The Authority may approve *Cryptosporidium* treatment credit for water treatment processes based on a demonstration of performance study that meets the criteria in this subsection. This treatment credit may be greater than or less than the prescribed treatment credits in subsection (4)(g) or sections (15) through (18) of this rule and may be awarded to treatment processes that do not meet the criteria for the prescribed credits.

(A) Water systems cannot receive the prescribed treatment credit for any toolbox option in sections (15) through (18) of this rule, if that

toolbox option is included in a demonstration of performance study for which treatment credit is awarded under this subsection.

(B) The demonstration of performance study must follow an Authority approved protocol, and must demonstrate the level of *Cryptosporidium* reduction achieved by the treatment process under the full range of expected operating conditions for the water system.

(C) Approval by the Authority must be in writing, and may include monitoring and treatment performance criteria that the system must demonstrate and report on an ongoing basis to remain eligible for the treatment credit. The Authority may require such criteria where necessary to verify that the conditions under which the demonstration of performance credit was approved are maintained during routine operation.

(17) Additional filtration toolbox components for meeting *Cryptosporidium* treatment requirements.

(a) Bag and cartridge filters. Systems receive *Cryptosporidium* treatment credit of up to 2.0-log for individual bag or cartridge filters and up to 2.5-log for bag or cartridge filters operated in series by meeting the requirements in OAR 333-061-0050(4)(c)(J). To be eligible for this credit, water systems must report to the Authority, the results of challenge testing conducted in accordance with OAR 333-061-0050(4)(c)(J). The filters must treat the entire plant flow.

(b) Membrane filtration. Systems receive *Cryptosporidium* treatment credit for membrane filtration that meets the requirements of this paragraph. Membrane cartridge filters that meet the definition of membrane filtration in OAR 333-061-0020(77)(f) are eligible for this credit. The level of treatment credit a system receives is equal to the lower of the values determined under OAR 333-061-0050(4)(c)(H)(i) and (ii).

(c) Second stage filtration. Water systems receive 0.5-log *Cryptosporidium* treatment credit for a separate second stage of Authority-approved filtration that consists of sand, dual media, GAC, or other fine grain media following granular media filtration. To be eligible for this credit, the first stage of filtration must be preceded by a coagulation step and, both filtration stages must treat the entire plant flow taken from a surface water or GWUDI source. The Authority must assign the treatment credit based on an assessment of the design characteristics of the filtration process. A cap (added layer of filter media), such as GAC, on a single stage of filtration is not eligible for this credit.

(d) Slow sand filtration (as secondary filter). Water systems are eligible to receive 2.5-log *Cryptosporidium* treatment credit for a slow sand filtration process that follows a separate stage of filtration if both filtration stages treat the entire plant flow taken from a surface water or GWUDI source, and no

disinfectant residual is present in the influent water to the slow sand filtration process. The Authority must assign the treatment credit based on an assessment of the design characteristics of the filtration process. This subsection does not apply to treatment credit awarded to slow sand filtration used as a primary filtration process.

(18) Inactivation toolbox components for meeting *Cryptosporidium* treatment requirements.

(a) If Chlorine Dioxide is used, CT values in Table 30 must be met.

(b) If Ozone is used, CT values in Table 31 must be met.

(c) To receive treatment credit for UV light, water systems must treat at least 95 percent of the water delivered to the public during each month by UV reactors operating within validated conditions for the required UV dose, as prescribed by OAR 333-061-0036(5)(c)(D) and OAR 333-061-0050(5)(k)(I). Systems must demonstrate compliance with this condition by the monitoring required in OAR 333-061-0036(5)(c)(D)(ii).

Stat. Auth.: ORS 448.131
Stats. Implemented: ORS 448.131

333-061-0034
Treatment Requirements and Performance Standards for Corrosion Control

(1) General requirements:

(a) All Community and Non-Transient Non-Community water systems required to provide corrosion control shall install and operate optimal corrosion control treatment.

(b) Any water system that complies with the applicable corrosion control treatment requirements specified by the Authority under sections (2) and (3) of this rule shall be deemed in compliance with the treatment requirement contained in subsection (1)(a) of this rule.

(c) Any system exceeding the lead or copper action level shall implement all applicable source water treatment requirements specified by the Authority under section (4) of this rule.

(d) Any system exceeding the lead action level shall implement the public education requirements contained in section (5) of this rule.

(e) Tap water monitoring for lead and copper, monitoring for water quality parameters, source water monitoring for lead and copper, and analyses of the monitoring results shall be completed in accordance with OAR 333-061-0036(1)(a) and 333-061-0036(2)(c).

(f) Systems shall report to the Authority all required treatment provision information and maintain appropriate records as prescribed in OAR 333-061-0034 and 0040.

(g) Failure to comply with the applicable requirements prescribed in these rules, shall constitute a violation of the national primary drinking water regulations for lead and/or copper.

(2) Systems shall complete the corrosion control treatment requirements as prescribed in section (3) of this rule as follows:

(a) Large systems (serving >50,000 persons) shall complete the following corrosion control treatment steps, unless it is deemed to have optimized corrosion control as prescribed in paragraphs (d)(B) or (d)(C) of this section:

(A) Systems shall conduct initial tap and water quality parameter monitoring for two consecutive six-month periods as prescribed in OAR 333-061-0036(2)(c)(D)(i) and (2)(c)(F) beginning January 1, 1992;

(B) Systems shall complete corrosion control studies prescribed in subsection (3)(c) of this rule by July 1, 1994;

(C) The Authority shall designate optimal corrosion control treatment as prescribed in subsection (3)(i) of this rule by January 1, 1995;

(D) Systems shall install optimal corrosion control treatment as prescribed in subsection (3)(k) of this rule by January 1, 1997;

(E) Systems shall complete follow-up sampling as prescribed in OAR 333-061-0036(2)(c)(D)(ii) and (2)(c)(F)(iv) by January 1, 1998;

(F) The Authority shall review installation of treatment and designate optimal water quality control parameters as prescribed in subsection (3)(l) of this rule by July 1, 1998.

(G) Systems shall operate in compliance with the Authority-specified optimal water quality control parameters as prescribed in subsection (3)(m) of this rule and continue to conduct tap sampling.

(b) Medium systems (serving 3,301 to 50,000 persons) shall complete the following corrosion control treatment steps, unless it is deemed to have optimized corrosion control under paragraph (d)(A),(d)(B), or (d)(C) of this section:

(A) Systems shall conduct initial tap sampling beginning July 1,1992 until the system either exceeds the lead or copper action level or becomes eligible for reduced monitoring under OAR 333-061-0036(2)(c)(D)(iv). A system exceeding the lead or copper action level shall recommend optimal corrosion control treatment within six months after the end of the monitoring period during which it exceeds one of the action levels.

(B) Within 12 months after the end of the monitoring period during which a system exceeds the lead or copper action level, the Authority may require the system to perform corrosion control studies. If the Authority does not require the system to perform such studies, the Authority shall specify optimal corrosion control treatment within the following time frames:

(i) For medium systems, within 18 months after the end of the monitoring period during which such system exceeds the lead or copper action level;

(ii) For small systems, within 24 months after the end of the monitoring period during which such system exceeds the lead or copper action level.

(C) If the Authority requires a system to perform corrosion control studies under paragraph (2)(b)(B) of this rule, the system shall complete the studies within 18 months after the Authority requires that such studies be conducted.

(D) If the system has performed corrosion control studies under paragraph (2)(b)(B) of this rule, the Authority shall designate optimal corrosion control treatment within 6 months after completion of paragraph (2)(b)(C) of this rule.

(E) Systems shall install optimal corrosion control treatment within 24 months after the Authority designates such treatment.

(F) Systems shall complete follow-up sampling within 36 months after the Authority designates optimal corrosion control treatment.

(G) The Authority shall review the system's installation of treatment and designate optimal water quality control parameters within 6 months after completion of follow-up sampling.

(H) Systems shall operate in compliance with the Authority-designated optimal water quality control parameters and continue to conduct tap sampling.

(c) Small systems (serving 3,300 or less persons) shall complete the corrosion control treatment steps prescribed in subsection (2)(b) of this rule, unless it is deemed to have optimized corrosion control under paragraphs (d)(A),(d)(B), or (d)(C) of this section. Small systems shall conduct initial tap sampling beginning July 1, 1993.

(d) A system is deemed to have optimized corrosion control and is not required to complete the applicable corrosion control treatment steps identified in this section if the system satisfies one of the following criteria. Any system deemed to have optimized corrosion control under this rule, and which has treatment in place, shall continue to operate and maintain optimal corrosion control treatment and meet any requirements that the Authority determines appropriate to ensure optimal corrosion control treatment is maintained:

(A) A small or medium-size water system meets the lead and copper action levels during each of two consecutive six-month monitoring periods conducted in accordance with OAR 333-061-0036(2)(c)(A) through (E).

(B) Any water system that demonstrates to the satisfaction of the Authority that it has conducted activities equivalent to the corrosion

control steps applicable to such system under this section. If the Authority makes this determination, it shall provide the system with written notice explaining the basis for its decision and shall specify the water quality control parameters representing optimal corrosion control in accordance with subsection (3)(l) of this rule. Water systems deemed to have optimized corrosion control under this paragraph shall operate in compliance with the Authority-designated optimal water quality control parameters in accordance with subsection (3)(m) of this rule and continue to conduct lead and copper tap and water quality parameter sampling in accordance with OAR 333-061-0036(2)(c)(D)(iii) and OAR 333-061-0036(2)(c)(F)(v), respectively. A system shall provide the Authority with the following information in order to support a determination under this paragraph:

(i) The results of all test samples collected for each of the water quality parameters in subsection (3)(d) of this rule;

(ii) A report explaining the test methods used by the water system to evaluate the corrosion control treatments listed in subsection (3)(c) of this rule, the results of all tests conducted, and the basis for the system's selection of optimal corrosion control treatment;

(iii) A report explaining how corrosion control has been installed and how it is being maintained to insure minimal lead and copper concentrations at consumers' taps; and

(iv) The results of tap water samples collected in accordance with OAR 333-061-0036(2)(c)(A) through (E) at least once every six months for one year after corrosion control has been installed.

(C) Any water system is deemed to have optimized corrosion control if it submits results of tap water monitoring and source water monitoring conducted in accordance with OAR 333-061-0036(2)(c)(A) through (E), (G) and (H) that demonstrates for two consecutive six-month monitoring periods that the difference between the 90th percentile tap water lead level computed under OAR 333-061-0030(1)(c)(A) and the highest source water lead concentration, is less than 0.005 mg/l:

(i) Those systems whose highest source water lead level is below the MDL may also be deemed to have optimized corrosion control if the 90th percentile tap water lead level is less than or equal to the PQL for lead for two consecutive 6-month monitoring periods;

(ii) Any water system deemed to have optimized corrosion control shall continue monitoring for lead and copper at the tap no less frequently than once every three years using the reduced number of sampling sites and collecting the samples at the

specified times and locations. Any such system that has not conducted a round of monitoring since September 30, 1997, shall complete a round of monitoring no later than September 30, 2000;

(iii) Any water system deemed to have optimized corrosion control shall notify the Authority in writing of any upcoming long-term change in treatment (eg. changing disinfectants or corrosion control chemicals) or the addition of a new source. The Authority must review and approve the addition of a new source or long-term change in water treatment before it is implemented by the water system. The Authority may require any such system to conduct additional monitoring or to take other action the Authority deems appropriate to ensure that such systems maintain minimal levels of corrosion in the distribution system;

(iv) As of July 2001, a system is not deemed to have optimized corrosion control unless it meets the copper action level.

(v) Any system triggered into corrosion control because it is no longer deemed to have optimized corrosion control shall implement corrosion control treatment in accordance with the deadlines prescribed in subsections (b) and (c) of this rule. Any such large system shall adhere to the schedule specified for medium size systems, with the time periods for completing each step being triggered by the date the system is no longer deemed to have optimized corrosion control.

(e) Any small or medium-size water system that is required to complete the corrosion control steps due to its exceedance of the lead or copper action level may cease completing the treatment steps whenever the system meets both action levels during each of two consecutive monitoring periods conducted pursuant to OAR 333-061-0036(2)(c)(A) through (E) and submits the results to the Authority. If any such water system thereafter exceeds the lead or copper action level during any monitoring period, the system (or the Authority, as the case may be) shall recommence completion of the applicable treatment steps, beginning with the first treatment step which was not previously completed in its entirety. The Authority may require a system to repeat treatment steps previously completed by the system where the Authority determines that this is necessary to implement properly the treatment requirements of this section. The Authority shall notify the system in writing of such a determination and explain the basis for its decision. The requirement for any small- or medium- size system to implement corrosion control treatment steps in accordance with subsection (2)(b) of this rule (including systems deemed to have optimized corrosion control under

paragraph (2)(d)(A) of this rule) is triggered whenever any small- or medium- size system exceeds the lead or copper action level.

(3) Each system shall complete the corrosion control treatment requirements described below which are applicable to such system under section (2) of this rule:

(a) Based upon the results of lead and copper tap monitoring and water quality parameter monitoring, small and medium-size water systems exceeding the lead or copper action level shall recommend installation of one or more of the corrosion control treatments listed in subsection (3)(c) of this rule which the system believes constitutes optimal corrosion control for that system. The Authority may require the system to conduct additional water quality parameter monitoring in accordance with OAR 333-061-0036(2)(c)(F)(iii) to assist the Authority in reviewing the system's recommendation.

(b) The Authority may require any small or medium-size system that exceeds the lead or copper action level to perform corrosion control studies under subsection (3)(c) of this rule to identify optimal corrosion control treatment for the system.

(c) Any public water system performing corrosion control studies shall evaluate the effectiveness of each of the treatments which follow, and, if appropriate, combinations of the treatments which follow to identify the optimal corrosion control treatment for that system. The water system shall evaluate each of the corrosion control treatments using either pipe rig/loop tests, metal coupon tests, partial-system tests, or analyses based on documented analogous treatments with other systems of similar size, water chemistry and distribution system configuration:

(A) Alkalinity and pH adjustment;

(B) Calcium hardness adjustment; and

(C) The addition of a phosphate or silicate based corrosion inhibitor at a concentration sufficient to maintain an effective residual concentration in all test tap samples.

(d) The water system shall measure the following water quality parameters in any tests conducted under this subsection before and after evaluating the corrosion control treatments listed in subsection (3)(c) of this rule:

(A) Lead;

(B) Copper;

(C) pH;

(D) Alkalinity;

(E) Calcium;

(F) Conductivity;

(G) Orthophosphate (when an inhibitor containing a phosphate compound is used);

(H) Silicate (when an inhibitor containing a silicate compound is used);

(I) Water temperature.

(e) Any additional chemical treatment approaches considered by the water system shall be evaluated by the water system by conducting appropriate studies and analyses approved by the Authority that are equivalent in scope to the studies and analyses required in this section.

(f) The water system shall identify all chemical or physical constraints that limit or prohibit the use of a particular corrosion control treatment and document such constraints with at least one of the following:

(A) Data and documentation showing that a particular corrosion control treatment has adversely affected other water treatment processes when used by another water system with comparable water quality characteristics; and/or

(B) Data and documentation demonstrating that the water system has previously attempted to evaluate a particular corrosion control treatment and has found that the treatment is ineffective or adversely affects other water quality treatment processes.

(g) The water system shall evaluate the effect of the chemicals used for corrosion control treatment on other water quality treatment processes.

(h) On the basis of an analysis of the data generated during each evaluation, the water system shall recommend to the Authority in writing the treatment option that the corrosion control studies indicate constitutes optimal corrosion control treatment for that system. The water system shall provide a rationale for its recommendation along with all supporting documentation specified in subsections (3)(c) through (g) of this rule.

(i) Based upon consideration of available information including, where applicable, studies performed under subsection (3)(c) through (g) of this rule and a system's recommended treatment alternative, the Authority shall either approve the corrosion control treatment option recommended by the system, or designate alternative corrosion control treatment(s) from among those listed in subsection (3)(c) of this rule. When designating optimal treatment the Authority shall consider the effects that additional corrosion control treatment will have on water quality parameters and on other water quality treatment processes.

(j) The Authority shall notify the system of its decision on optimal corrosion control treatment in writing and explain the basis for this determination. If the Authority requests additional information to aid its review, the water system shall provide the information.

(k) Each system shall properly install and operate throughout its distribution system the optimal corrosion control treatment designated by the Authority under subsection (3)(i) of this rule.

(l) The Authority shall evaluate the results of all lead and copper tap samples and water quality parameter samples submitted by the water system and determine whether the system has properly installed and operated the

optimal corrosion control treatment designated by the Authority in subsection (3)(i) of this rule. Upon reviewing the results of tap water and water quality parameter monitoring by the system, both before and after the system installs optimal corrosion control treatment, the Authority shall designate values for the applicable water quality control parameters as listed below and shall be those that the Authority determines to reflect optimal corrosion control treatment for the system. The Authority may designate values for additional water quality control parameters determined by the Authority to reflect optimal corrosion control for the system. The Authority shall notify the system in writing of these determinations and explain the basis for its decisions.

(A) A minimum value or a range of values for pH measured at each entry point to the distribution system;

(B) A minimum pH value, measured in all tap samples. Such value shall be 7.0, unless the Authority determines that meeting a pH level of 7.0 is not technologically feasible or is not necessary for the system to optimize corrosion control;

(C) If a corrosion inhibitor is used, a minimum concentration or a range of concentrations for the inhibitor, measured at each entry point to the distribution system and in all tap samples, that the Authority determines is necessary to form a passivating film on the interior walls of the pipes of the distribution system;

(D) If alkalinity is adjusted as part of optimal corrosion control treatment, a minimum concentration or a range of concentrations for alkalinity, measured at each entry point to the distribution system and in all tap samples;

(E) If calcium carbonate stabilization is used as part of corrosion control, a minimum concentration or a range of concentrations for calcium, measured in all tap samples.

(m) All systems that have installed treatment optimizing corrosion control shall continue to operate and maintain optimal corrosion control treatment, including maintaining water quality parameters at or above minimum values or within ranges designated by the Authority under subsection (3)(l) of this rule for all samples collected under OAR 333-061-0036(2)(c)(F)(v)-(vii). Compliance shall be determined every six months, as specified under OAR 333-061-0036(2)(c)(F)(v). A water system is out of compliance for a six-month period if it has excursions for any Authority-designated water quality parameter on more than nine days during the period. An excursion occurs whenever the daily value for one or more of the water quality parameters measured at a sampling location is below the minimum value or outside the range designated by the Authority. Daily values are calculated as follows:

(A) On days when more than one measurement for the water quality parameter is collected at the sampling location, the daily value shall be the average of all results collected during the day regardless of whether they are collected through continuous monitoring, grab sampling or a combination of both;

(B) On days when only one measurement for the water quality parameter is collected at the sampling location, the daily value shall be the result of that measurement.

(C) On days when no measurement is collected for the water quality parameter at the sampling location, the daily value shall be the daily value calculated on the most recent day on which the water quality parameter was measured at the sample site;

(n) Upon its own initiative or in response to a request by a water system or other interested party, the Authority may modify its determination of the optimal corrosion control treatment under subsection (3)(i) of this rule or optimal water quality control parameters under subsection (3)(l) of this rule. A request for modification by a system or other interested party shall be in writing, explain why the modification is appropriate, and provide supporting documentation. The Authority may modify its determination where it concludes that such change is necessary to ensure that the system continues to optimize corrosion control treatment. A revised determination shall be made in writing, set forth the new treatment requirements, explain the basis for the Authority's decision, and provide an implementation schedule for completing the treatment modifications.

(4) Source water treatment requirements:

(a) Systems shall complete the applicable source water monitoring and treatment requirements prescribed in subsection (4)(b) of this rule and OAR 333-061-0036(2)(c)(A) through (E), (G) and (H) by the following deadlines:

(A) A system exceeding the lead or copper action level shall complete lead and copper source water monitoring as prescribed in OAR 333-061-0036(2)(c)(G) and (H) and make a treatment recommendation to the Authority as prescribed in paragraph (4)(b)(A) of this rule no later than 180 days after the end of the monitoring period during which the lead or copper action level was exceeded.

(B) The Authority shall make a determination regarding source water treatment as prescribed in paragraph (4)(b)(B) of this rule within 6 months after submission of monitoring results required under paragraph (4)(a)(A) of this rule.

(C) If the Authority requires installation of source water treatment, the system shall install the treatment as prescribed in paragraph (4)(b)(C) of this rule within 24 months after completion of requirements prescribed in paragraph (4)(a)(B) of this rule.

(D) The system shall complete follow-up tap water monitoring as prescribed in OAR 333-061-0036(2)(c)(D)(ii) and source water monitoring as prescribed in OAR 333-061-0036(2)(c)(I) within 36 months after completion of requirements prescribed in paragraph (4)(a)(B) of this rule.

(E) The Authority shall review the system's installation and operation of source water treatment and specify maximum permissible source water levels as prescribed in paragraph (4)(b)(D) of this rule within 6 months after completion of requirements prescribed in paragraph (4)(a)(D) of this rule.

(F) The system shall operate in compliance with the Authority-specified maximum permissible lead and copper source water levels as prescribed in paragraph (4)(b)(D) of this rule and continue source water monitoring as prescribed in OAR 333-061-0036(2)(c)(J).

(b) Source water treatment description:

(A) Any system which exceeds the lead or copper action level shall recommend in writing to the Authority the installation and operation of one of the source water treatments listed in paragraph (4)(b)(B) of this rule. A system may recommend that no treatment be installed based upon a demonstration that source water treatment is not necessary to minimize lead and copper levels at users' taps.

(B) The Authority shall complete an evaluation of the results of all source water samples submitted by the water system to determine whether source water treatment is necessary to minimize lead or copper levels in water delivered to users' taps. If the Authority determines that treatment is needed, the Authority shall either require installation and operation of the source water treatment recommended by the system (if any) or require the installation and operation of another source water treatment from among the following: ion exchange, reverse osmosis, lime softening or coagulation/filtration. If the Authority requests additional information to aid in its review, the water system shall provide the information by the date specified by the Authority in its request. The Authority shall notify the system in writing of its determination and set forth the basis for its decision.

(C) Each system shall properly install and operate the source water treatment designated by the Authority under paragraph (4)(b)(B) of this rule.

(D) The Authority shall review the source water samples taken by the water system both before and after the system installs source water treatment, and determine whether the system has properly installed and operated the source water treatment designated by the Authority. Based upon its review, the Authority shall designate the maximum

permissible lead and copper concentrations for finished water entering the distribution system. Such levels shall reflect the contaminant removal capability of the treatment properly operated and maintained. The Authority shall notify the system in writing and explain the basis for its decision.

(E) Each water system shall maintain lead and copper levels below the maximum permissible concentrations designated by the Authority at each sampling point monitored in accordance with OAR 333-061-0036(2)(c)(G) through (K). The system is out of compliance with this paragraph if the level of lead or copper at any sampling point is greater than the maximum permissible concentration designated by the Authority.

(F) Upon its own initiative or in response to a request by a water system or other interested party, the Authority may modify its determination of the source water treatment under paragraph (4)(b)(B) of this rule, or maximum permissible lead and copper concentrations for finished water entering the distribution system under paragraph (4)(b)(D) of this rule. A request for modification by a system or other interested party shall be in writing, explain why the modification is appropriate, and provide supporting documentation. The Authority may modify its determination where it concludes that such change is necessary to ensure that the system continues to minimize lead and copper concentrations in source water. A revised determination shall be made in writing, set forth the new treatment requirements, explain the basis for the Authority's decision, and provide an implementation schedule for completing the treatment modifications.

(5) All water systems must deliver a consumer notice of lead tap water monitoring results to persons served by the water system at sites that are tested, as specified in subsection (5)(e) of this rule. Water systems that exceed the lead action level must sample the tap water of any customer who requests it in accordance with subsection (5)(d) of this rule. A water system that exceeds the lead action level based on tap water samples collected in accordance with OAR 333-061-0036(2)(c)(A) through (E) shall deliver the public education materials contained in subsections (5)(a) and (b) of this rule in accordance with the requirements in subsection (5)(c) of this rule.

(a) Content of written materials. Community and non-transient non-community water system(s) shall include the following elements in all of the printed materials it distributes through its lead public education program in the same order listed below. Paragraphs (5)(a)(A), (B) and (F) of this rule must be included in the materials exactly as written except for the text in braces in these paragraphs for which the system must include system-specific information. Any additional information presented by a system shall be

consistent with the information below and be in plain language that can be understood by the general public. Water systems must submit all written public education materials to the Authority prior to delivery.

(A) IMPORTANT INFORMATION ABOUT LEAD IN YOUR DRINKING WATER. {INSERT NAME OF WATER SYSTEM} found elevated levels of lead in drinking water in some homes/buildings. Lead can cause serious health problems, especially for pregnant women and young children. Please read this information closely to see what you can do to reduce lead in your drinking water.

(B) HEALTH EFFECTS OF LEAD: Lead can cause serious health problems if too much enters your body from drinking water or other sources. It can cause damage to the brain and kidneys, and can interfere with the production of red blood cells that carry oxygen to all parts of the body. The greatest risk of lead exposure is to infants, young children and pregnant women. Scientists have linked the effects of lead on the brain with lowered IQ in children. Adults with kidney problems and high blood pressure can be affected by low levels of lead more than healthy adults. Lead is stored in the bones, and it can be released later in life. During pregnancy, the child receives lead from the mother's bones, which may affect brain development.

(C) SOURCES OF LEAD:

(i) Explain what lead is.

(ii) Explain the possible sources of lead in drinking water and how lead enters drinking water. Include information on home/building plumbing materials and service lines that contain lead.

(iii) Discuss other important sources of lead exposure in addition to drinking water (e.g., paint).

(D) STEPS THE CONSUMER CAN TAKE TO REDUCE THEIR EXPOSURE TO LEAD IN DRINKING WATER:

(i) Encourage running the water to flush out the lead.

(ii) Explain concerns with using hot water from the tap and specifically caution against the use of hot water for preparing baby formula.

(iii) Explain that boiling water does not reduce lead levels.

(iv) Discuss other options consumers can take to reduce exposure to lead in drinking water, such as alternative sources or treatment of water.

(v) Suggest that parents have their child's blood tested for lead.

(E) Explain why there are elevated levels of lead in the system's drinking water (if known) and what the water system is doing to reduce the lead levels in homes/buildings in this area.

(F) For more information, call us at {INSERT YOUR NUMBER}, {(if applicable include the following) or visit our web site at {INSERT YOUR WEB SITE HERE}}. For more information on reducing lead exposure around your home/building and the health effects of lead, visit EPA's web site at *http://www.epa.gov/lead* or contact your health care provider.

(b) Community water systems must also:

(A) Tell consumers how to get their water tested;

(B) Discuss lead in plumbing components and the difference between low lead and lead free.

(c) Delivery of public education materials.

(A) For public water systems serving a large proportion of non-English speaking consumers, as determined by the Authority, the public education materials must contain information in the appropriate language(s) regarding the importance of the notice or contain a telephone number or address where persons served may contact the water system to obtain a translated copy of the public education materials or to request assistance in the appropriate language.

(B) A community water system that exceeds the lead action level on the basis of tap water samples collected in accordance with tap water monitoring requirements of these rules and that is not already conducting public education tasks under this rule must conduct the public education tasks under this section within 60 days after the end of the monitoring period in which the exceedance occurred.

(i) Deliver printed materials meeting the content requirements of subsections (5)(a) and (5)(b) of this rule to all bill paying customers;

(ii) Contact customers who are most at risk by delivering education materials that meet the content requirements of subsections (5)(a) and (5)(b) of this rule to local public health agencies even if they are not located within the water system's service area, along with an informational notice that encourages distribution to all the organization's potentially affected customers or community water system's users. The water system must contact the local public health agencies directly by phone or in person. The local public health agencies may provide a specific list of additional community based organizations serving target populations, which may include organizations outside the service area of the water system. If such lists are provided, systems must deliver education materials that meet the content requirements of subsections (5)(a) and (5)(b) of this rule to all organizations on the provided lists.

(iii) Contact customers who are most at risk by delivering materials that meet the content requirements of subsections (5)(a) and (5)(b) of this rule to public and private schools or school boards; Women, Infants and children (WIC), and Head Start programs; public and private hospitals and medical clinics; Pediatricians; family planning clinics; and local welfare agencies located within the water system's service area along with an informational notice that encourages distribution to all of the organization's potentially affected customers or community water system's users.

(iv) Make a good faith effort to locate licensed childcare centers; public and private preschools; and Obstetricians-Gynecologists and Midwives within the service area and deliver materials that meet the content requirements of subsections (5)(a) and (5)(b) of this rule to them, along with an informational notice that encourages distribution to all potentially affected customers or users. The good faith effort to contact at-risk customers may include requesting a specific contact list of these organizations from the local public health agencies, even if the agencies are not located within the water system's service area.

(v) No less often than quarterly, provide information on or in each water bill as long as the system exceeds the action level for lead. The message on the water bill must include the following statement exactly as written except for the text in braces for which the water system must include system-specific information: {INSERT NAME OF WATER SYSTEM} found high levels of lead in drinking water in some homes. Lead can cause serious health problems. For more information please call {INSERT NAME OF WATER SYSTEM}, {(if applicable include the following) or visit our web site at {INSERT YOUR WEB SITE HERE}}. The message or delivery mechanisms can be modified in consultation with the Authority; specifically the Authority may allow a separate mailing of public education materials to customers if the water system cannot place the information on water bills.

(vi) Post material meeting the content requirements of subsection (5)(a) and (5)(b) of this rule on the water system's web site if the system serves a population greater than 100,000.

(vii) Submit a press release to newspaper, television and radio stations.

(viii) In addition to (5)(c)(B)(i) through (vii) of this rule systems must implement at least three activities from the following:

public service announcements; paid advertisements; public area information displays; emails to customers; public meetings; household deliveries, targeted individual customer contact; direct material distribution to all multi-family homes and institutions or other methods approved by the Authority. The educational content and selection of these activities must be determined in consultation with the Authority.

(ix) For systems that are required to conduct monitoring annually or less frequently, the end of the monitoring period is September 30 of the calendar year in which the sampling occurs, or, if the Authority has established an alternate monitoring period, the last day of that period.

(C) As long as a community water system exceeds the action level, it must repeat the activities in subsection (5)(c) of this rule as follows:

(i) A community water system shall repeat the tasks contained in (5)(c)(B)(i),(ii),(iii),(iv) and (viii) of this rule every 12 months.

(ii) A community water system shall repeat tasks contained in (5)(c)(B)(v) of this rule with each billing cycle.

(iii) A community water system serving a population greater than 100,000 shall post and retain material on a publicly accessible web site pursuant to (5)(c)(B)(vi) of this rule.

(iv) The community water system shall repeat the task in (5)(c)(B)(vii) of this rule twice every 12 months on a schedule agreed upon with the Authority. The Authority can allow activities in (5)(c)(B) of this rule to extend beyond the 60-day requirement if needed for implementation purposes on a case-by-case basis; however, this extension must be approved in writing by the Authority in advance of the 60-day deadline.

(D) Within 60 days after the end of the monitoring period in which the exceedance occurred (unless it already is repeating public education tasks), a non-transient non-community water system shall deliver the public education materials specified by (5)(a) of this rule as follows:

(i) Post informational posters on lead in drinking water in a public place or common area in each of the buildings served by the system; and

(ii) Distribute informational pamphlets and/or brochures on lead in drinking water to each person served by the non-transient non-community water system. The Authority may allow the system to utilize electronic transmission in lieu of or combined with printed materials as long as it achieves at least the same coverage.

(iii) For systems that are required to conduct monitoring annually or less frequently, the end of the monitoring period is September 30 of the calendar year in which the sampling occurs, or, if the Authority has established an alternate monitoring period, the last day of that period.

(E) A non-transient non-community water system shall repeat the tasks contained in (5)(c)(D) at least once during each calendar year in which the system exceeds the action level. The Authority can allow activities to extend beyond the 60-day requirement if needed for implementation purposes on a case-by-case basis, however, this extension must be approved in writing by the Authority in advance of the 60-day deadline.

(F) A water system may discontinue delivery of public education materials if the system has met the lead action level during the most recent six-month monitoring period conducted pursuant to the monitoring requirements of these rules. Such a system shall recommence public education requirements if it subsequently exceeds the lead action level during any monitoring period.

(G) A community water system may apply to the Authority, in writing to use only the text specified in (5)(a) of this rule in lieu of the text in (5)(a) and (5)(b) of this rule and to perform the tasks listed in (5)(c)(D) and (E) in lieu of the tasks in (5)(c)(B) and (C) of this rule if:

(i) The system is a facility, such as a prison or a hospital, where the population served is not capable of or is prevented from making improvements to plumbing or installing point of use treatment devices: and

(ii) The system provides water as part of the cost of services provided and does not separately charge for water consumption.

(H) A community water system serving 3,300 or fewer people may limit certain aspects of their public education programs as follows:

(i) With respect to the requirements of (5)(c)(B)(viii), a system serving 3,300 or fewer must implement at least one of the activities listed.

(ii) With respect to the requirements of (5)(c)(B)(ii), (iii) and (iv) of this rule, a system serving 3,300 or fewer people may limit the distribution of the public education materials required to facilities and organizations served by the system that are most likely to be visited regularly by pregnant women and children.

(iii) With respect to the requirements of (5)(c)(B)(vii) of this rule the Authority may waive this requirement for systems serving

3,300 or fewer persons as long as the system distributes notices to every household served by the system.

(d) Supplemental monitoring and notification of results. A water system that fails to meet the lead action level on the basis of tap samples collected in accordance with OAR 333-061-0036(2)(c)(A) through (E) shall offer to sample the tap water of any customer who requests it. The system is not required to pay for collecting or analyzing the sample, nor is the system required to collect and analyze the sample itself.

(e) Notification of results.

(A) All water systems must provide a notice of the individual tap results from lead tap water monitoring carried out under the monitoring requirements of these rules to the persons served by the water system at the specific sampling site from which the sample was taken (e.g. the occupants of the residence where the tap was tested).

(B) A water system must provide the consumer notice as soon as practical, but no later than 30 days after the system learns of the tap monitoring results.

(C) The consumer notice must include the results of lead tap water monitoring for the tap that was tested, an explanation of the health effects of lead, list steps consumers can take to reduce exposure to lead in drinking water and contact information for the water utility. The notice must also provide the maximum contaminant level goal and the action level for lead and the definitions for these two terms.

(D) The Consumer notice must be provided to persons served at the tap that was tested, either by mail or by another method approved by the Authority. For example, upon approval by the Authority, a non-transient, non-community water system could post the results on a bulletin board in the facility to allow users to review the information. The system must provide the notice to customers at sample taps tested, including consumers who do not receive water bills.

Stat. Auth.: ORS 448.131
Stats. Implemented: ORS 431.110, 431.150, 448.131, 448.150 & 448.273

333-061-0036
Sampling and Analytical Requirements

(1) General:

(a) Samples required by these rules must be analyzed using EPA approved methods set forth in 40 CFR 141 by a laboratory accredited according to OAR chapter 333, division 064 and the Oregon Environmental Laboratory Accreditation Program (ORELAP). The laboratory must be certified to analyze drinking water samples using the specific method for the contaminant being analyzed.

(A) The Authority will only accept sample results that have been handled and documented in accordance with ORELAP standards, except as prescribed by subsection (1)(i) of this rule.

(B) Samples required by these rules must be collected after the water has been allowed to flow from the sample tap for a sufficient length of time to assure that the collected sample is representative of water in the distribution system or from the water source as applicable, except samples for lead or copper in tap water which must be collected as prescribed by paragraph (2)(c)(B) of this rule.

(b) Accredited laboratories will be considered a primary or subcontracted laboratory as specified by paragraphs (1)(b)(A) and (B) of this rule.

(A) A primary laboratory is the first accredited laboratory that receives a compliance sample for analysis, and is responsible for chain of custody documentation (if applicable), performing the analytical method on a compliance sample (if applicable), final report review, and submission of results to the water system and the Authority as specified in OAR 333-061-0040(1)(b)(B). Primary laboratories must hold primary or secondary ORELAP accreditation.

(B) A subcontracted laboratory is an accredited laboratory that performs the analytical method on a compliance sample, and is responsible for sample analysis and result reporting to the primary laboratory as specified in OAR 333-061-0040(1)(b)(B). Subcontracted laboratories must hold ORELAP primary or secondary accreditation for the appropriate method(s).

(c) Alternate Analytical Methods:

(A) With the written permission of the Authority, and concurred in by the Administrator of the U.S. EPA, an alternate analytical method may be employed on the condition that it is substantially equivalent to the prescribed test in both precision and accuracy as it relates to the determination of compliance with any MCL; and

(B) The use of the alternate analytical method shall not decrease the frequency of sampling required by these rules.

(d) Monitoring of purchasing water systems:

(A) When a public water system obtains its water, in whole or in part, from one or more public water systems, the monitoring requirements imposed by these rules on the purchasing water system may be modified by the Authority to the extent that the system supplying the water is in compliance with its source monitoring requirements. When a public water system supplies water to one or more other public water systems, the Authority may modify monitoring requirements imposed by this rule to the extent that the interconnection of the

systems justifies treating them as a single system for monitoring purposes.

(B) Any modified monitoring shall be conducted pursuant to a schedule specified by the Authority and concurred in by the Administrator of the US Environmental Protection Agency.

(e) Water suppliers shall monitor each water source individually for contaminants listed in OAR 333-061-0030 (Maximum Contaminant Levels), except for coliform bacteria, HAA5s, TTHMs and corrosion by-products, at the entry point to the distribution system except as described below. Any such modified monitoring shall be conducted pursuant to a schedule prescribed by the Authority.

(A) If the system draws water from more than one source and sources are combined before distribution, the system may be allowed to sample at an entry point to the distribution system during normal operating conditions, where justified, taking into account operational considerations, geologic and hydrologic conditions, and other factors.

(B) If a system draws water from multiple ground water sources which are not combined before distribution, the system may be allowed to sample at a representative source or sources, where justified, taking into account geologic and hydrogeologic conditions, land uses, well construction, and other factors.

(f) Compliance with MCLs shall be based on each sampling point as described in this section. If any point is determined to be out of compliance, the system shall be deemed out of compliance. If an entirely separated portion of a water system is out of compliance, then only that portion of the system shall be deemed out of compliance.

(g) The Authority may require additional sampling and analysis for the contaminants included in OAR 333-061-0030 (Maximum Contaminant Levels) when necessary to determine whether an unreasonable risk to health exists. The Authority may also require sampling and analysis for additional contaminants not included in OAR 333-061-0030 (Maximum Contaminant Levels) when necessary for public health protection.

(h) Water suppliers and their appointed representatives shall collect water samples from representative locations in the water system as prescribed in this rule and shall employ proper sampling procedures and techniques. Samples submitted to laboratories for analysis shall be clearly identified and shall include the name of the water system, public water system identification number, sampling date, and time, sample location identifying the sample tap, the name of the person collecting the sample and be labeled as follows:

(A) Routine: These are samples collected from established sampling locations within a water system at specified frequencies to satisfy

monitoring requirements as prescribed in this rule. These samples are used to calculate compliance with maximum contaminant levels prescribed in OAR 333-061-0030(4);

(B) Repeat: These are samples collected as a follow-up to a routine sample that has exceeded a maximum contaminant level as prescribed in OAR 333-061-0030. Repeat samples are also used to calculate compliance with maximum contaminant levels prescribed in OAR 333-061-0030(4);

(C) Special: These are samples collected to supplement routine monitoring samples and are not required to be reported to the Authority. Samples of this type are not considered representative of the water system and are outside the scope of normal quality assurance and control procedures or the established compliance monitoring program. Special samples include, but are not limited to, samples taken for special studies, user complaints, post construction/repair disinfection, sources not in service and raw water prior to treatment, except as required by this rule.

(i) Measurements for turbidity, disinfectant residual, temperature, alkalinity, calcium, conductivity, chlorite, bromide, TOC, SUVA, dissolved organic carbon, UV254, orthophosphate, silica and pH may be performed on site using approved methods by individuals trained in sampling and testing techniques. Daily chlorite samples measured at the entrance to the distribution system must be performed by a party approved by the Authority.

(j) Nothing in these rules shall be construed to preclude the Authority or any of its duly authorized representatives from taking samples and from using the results of such samples to determine compliance with applicable requirements of these rules.

(k) Wellfield Determination

(A) Water systems possessing two or more wells that separately supply water to the distribution system may be eligible to have those wells considered as a wellfield source for monitoring purposes provided the requirements of this rule are met. Information pertinent to determining whether the wellfield designation is appropriate can be found in the water system's Source Water Assessment Report.

(B) To be classified as a wellfield, the wells must meet the following criteria:

(i) The wells must be within 2,500 feet of one another or as determined in a state approved hydrogeological study to minimize inter-well interference drawdowns. For wells located in a low-impact land use area, this criterion may be waived at the discretion of the Authority.

(ii) The wells must produce from the same and no other aquifer. This criterion is determined using source water assessment results, based on well reports, maps and other hydrogeological information.

(C) To be considered for wellfield designation, the water supplier must submit the following to the Authority:

(i) A schematic drawing showing all sources, entry points and relevant sample taps;

(ii) A map and description of the land use activities within the respective wellhead protection areas (using the inventory section of the Source Water Assessment Report); and

(iii) A description of the pumping patterns.

(D) If a water system's wells are considered to comprise a wellfield, the susceptibility analysis conducted during the source water assessment is utilized to determine the sampling point(s). Table 14 summarizes the alternatives:

Table 14

A	B	C	Designation	Sample Location
Y	Y	Y	EP for wellfield	Most susceptible well Entry point
Y	Y	N	Wellfield	Entry point for most susceptible well
N	Y	Y	EP for wellfield	Entry point for wellfield
Y	N	Y	EP for wells (not a wellfield)	Entry point
N	N	Y	EP for wells (not a wellfield)	Entry point
Y	N	N	Separate (not a wellfield)	Each entry point separately
N	Y	N	Separate (not a wellfield)	Each entry point separately
N	N	N	Separate (not a wellfield)	Each entry point separately

Note: A: wells are within 2,500 feet of each other; B: wells are in the same and no other aquifer; C: wells have a common entry point to the distribution system and pump simultaneously.

(E) To determine the most susceptible well, the area within the two-year time-of-travel is considered. The Authority will consider the potential contaminant source inventory determined during the source water assessment, the aquifer sensitivity, pumping patterns and other pertinent hydrogeological information.

(F) The Authority may still designate more than one entry point within the wellfield as a sampling point if well construction or land use practices warrant. For a large area containing numerous wells, sub-wellfields may be identified, each with its own sample site designation.

(2) Inorganic chemicals:

(a) Antimony, Arsenic, Barium, Beryllium, Cadmium, Chromium, Cyanide, Fluoride, Mercury, Nickel, Selenium and Thallium.

(A) Sampling of water systems for regulated Inorganic Chemicals shall be conducted as follows:

(i) Community and Non-Transient Non-Community Water systems using surface water sources or groundwater sources under the direct influence of surface water solely or a combination of surface and ground water sources shall sample at each point in the distribution system representative of each source after treatment or at entry points to the distribution system after any application of treatment. Surface water systems shall collect samples annually at each sampling point beginning in the initial compliance period according to the schedule in subsection (2)(j) of this rule. The water system shall take each sample at the same sampling point unless conditions make another sampling point more representative of each source or treatment plant.

(ii) Community and Non-Transient Non-Community Water systems using ground water sources shall sample at each point in the distribution system representative of each source after treatment or at entry points to the distribution system representative of each source after any application of treatment. Ground water systems shall collect samples once every three years at each sampling point beginning in the initial compliance period according to the schedule in subsection (2)(j) of this rule. The water system shall take each sample at the same sampling point unless conditions make another sampling point more representative of each source or treatment plant.

(iii) All new Transient Non-Community and State Regulated water systems or existing Transient Non-Community, and State Regulated water systems with new sources shall sample once for arsenic. Samples are to be collected at the entry points to the distribution system representative of each source after any application of treatment.

(iv) If a system draws water from more than one source and the sources are combined before distribution, the system must

sample at an entry point to the distribution system during periods of normal operating conditions when water is representative of all the sources being used.

(v) A water system with two or more wells that have been determined to constitute a "wellfield" as specified in subsection (1)(k) of this rule may reduce sampling to only those entry point(s) designated by the Authority.

(B) The Authority may allow compositing of samples from a maximum of 5 sampling points, provided that the detection limit of the method used for analysis is less than one-fifth of the MCL. Compositing of samples is to be done in the laboratory. Composite samples must be analyzed within 14 days of collection. If the concentration in the composite sample is equal to or greater than one-fifth of the MCL of any inorganic chemical listed in section (2) of this rule, then a follow-up sample must be taken for the contaminants which exceeded one-fifth of the MCL within 14 days at each sampling point included in the composite. If duplicates of the original sample taken from each sampling point used in the composite are available, the system may use these instead of resampling. The duplicates must be analyzed and the results reported to the Authority within 14 days of collection. If the population served by the water system is >3,300 persons, then compositing can only be allowed within the system. In systems serving ≤3,300 persons, compositing is allowed among multiple systems provided the 5 sample limit is maintained.

(C) Water systems may apply to the Authority for a waiver from the monitoring frequencies specified in paragraph (2)(a)(A) of this rule on the condition that the system shall take a minimum of one sample while the waiver is effective and the effective period for the waiver shall not exceed one nine-year compliance cycle.

(i) The Authority may grant a waiver provided surface water systems have monitored annually for at least three years and groundwater systems have conducted a minimum of three rounds of monitoring (at least one sample shall have been taken since January 1, 1990), and all analytical results are less than the maximum contaminant levels prescribed in OAR 333-061-0030 for inorganic chemicals. Systems that use a new water source are not eligible for a waiver until three rounds of monitoring from the new source have been completed.

(ii) Waivers granted by the Authority shall be in writing and shall set forth the basis for the determination. The Authority shall review and revise, where appropriate, its determination of the appropriate monitoring frequency when the system submits new

monitoring data or where other data relevant to the system's appropriate monitoring frequency become available. In determining the appropriate reduced monitoring frequency, the Authority shall consider the reported concentrations from all previous monitoring; the degree of variation in reported concentrations; and other factors which may affect concentrations such as changes in groundwater pumping rates, changes in the system's configuration, changes in the system's operating procedures, or changes in stream flows or characteristics.

(D) Systems which exceed the maximum contaminant levels as calculated in subsection (2)(i) of this rule shall monitor quarterly beginning in the next quarter after the violation occurred. The Authority may decrease the quarterly monitoring requirement to the frequencies prescribed in paragraph (2)(a)(A) of this rule when it is determined that the system is reliably and consistently below the maximum contaminant level. Before such a decrease is permitted a groundwater system must collect at least two quarterly samples and a surface water system must collect a minimum of four quarterly samples.

(E) All new systems or systems that use a new source of water must demonstrate compliance with the MCL within a period of time specified by the Authority. The system must also comply with the initial sampling frequencies specified by the Authority to ensure a system can demonstrate compliance with the MCL. Routine and increased monitoring frequencies shall be conducted in accordance with the requirements in this section.

(b) Asbestos:

(A) At community and non-transient non-community water systems regardless of source, sampling must be conducted for Asbestos at least once during the initial three-year compliance period of each nine-year compliance cycle unless a waiver is granted by the Authority according to paragraph (2)(b)(B) of this rule.

(B) The Authority may grant a waiver from the monitoring prescribed by paragraph (2)(b)(A) of this rule if a water system is determined not to be vulnerable to either asbestos contamination in its source water or due to corrosion of asbestos-cement pipe, or both. If granted, the water supplier will not be required to monitor while the waiver remains in effect. A waiver remains in effect until the completion of the three year compliance period.

(C) At water systems vulnerable to asbestos contamination due solely to corrosion of asbestos-cement pipe, one sample must be collected at a

tap served by the asbestos-cement pipe under conditions where asbestos contamination is most likely to occur.

(D) At water systems vulnerable to asbestos contamination due solely to asbestos in source water shall, one sample must be collected at the entry point to the distribution system after any treatment.

(E) A system vulnerable to asbestos contamination due both to its source water supply and corrosion of asbestos-cement pipe shall take one sample at a tap served by asbestos-cement pipe and under conditions where asbestos contamination is most likely to occur.

(F) If a sample result exceeds the maximum contaminant level for asbestos as prescribed in subsection (2)(i) of this rule, the water supplier shall monitor quarterly beginning in the next quarter after the violation occurred. If the Authority determines that the sample results are reliably and consistently below the maximum contaminant level based on a minimum of two quarterly samples for groundwater systems or a minimum of four quarterly samples for water systems using surface water sources, the monitoring may be returned to the frequency prescribed in paragraph (2)(b)(A) of this rule.

(c) Lead and Copper:

(A) At community and non-transient non-community water systems, monitoring for lead and copper in tap water must be conducted as specified in this subsection. Sample site location:

(i) Each water system shall complete a materials evaluation of its distribution system in order to identify a pool of targeted sampling sites that meets the requirements of this paragraph, and which is sufficiently large to ensure that the water system can collect the number of lead and copper tap samples required in paragraph (2)(c)(C) of this rule. All sites from which first draw samples are collected shall be selected from this pool of targeted sampling sites. Sampling sites may not include faucets that have point-of-use or point-of-entry treatment devices designed to remove inorganic contaminants.

(ii) In addition to any information that may have been gathered under the special corrosivity monitoring requirements, the water system shall review the sources of information listed below in order to identify a sufficient number of sampling sites:

(I) All plumbing codes, permits, and records in the files of the building department(s) which indicate the plumbing materials that are installed within publicly and privately owned structures connected to the distribution system; and

(II) All existing water quality information, which includes the results of all prior analyses of the system or individual structures connected to the system, indicating locations that may be particularly susceptible to high lead or copper concentrations.

(iii) The sampling sites selected for a community water system's sampling pool ("tier 1 sampling sites") shall consist of single family structures that contain copper pipes with lead solder installed from January 1, 1983 through June 30, 1985 or contain lead pipes. When multiple-family residences comprise at least 20 percent of the structures served by a water system, the system may include these types of structures in its sampling pool.

(iv) Any community water system with insufficient tier 1 sampling sites shall complete its sampling pool with "tier 2 sampling sites", consisting of buildings, including multiple-family residences that contain copper pipes with lead solder installed from January 1, 1983 through June 30, 1985 or contain lead pipes.

(v) Any community water system with insufficient tier 1 and tier 2 sampling sites shall complete its sampling pool with "tier 3 sampling sites", consisting of single family structures that contain copper pipes with lead solder installed before 1983. A community water system with insufficient tier 1, tier 2 and tier 3 sampling sites shall complete its sampling pool with representative sites throughout the distribution system. A representative site is a site in which the plumbing materials used at that site would be commonly found at other sites served by the system.

(vi) The sampling sites selected for a non-transient non-community water system ("tier 1 sampling sites") shall consist of buildings that contain copper pipes with lead solder installed from January 1, 1983 through June 30, 1985 or contain lead pipes.

(vii) A non-transient non-community water system with insufficient tier 1 sites that meet the targeting criteria in subparagraph (2)(c)(A)(vi) of this rule shall complete its sampling pool with sampling sites that contain copper pipes with lead solder installed before 1983. If additional sites are needed, the system shall use representative sites throughout the distribution system. A representative site is a site in which the plumbing materials used at that site would be commonly found at other sites served by the water system.

(viii) Any water system whose sampling pool does not consist exclusively of tier 1 sites shall demonstrate in a letter submitted to the Authority under OAR 333-061-0040(1)(g)(A)(i) why a review of the information listed in subparagraph (2)(c)(A)(ii) of this rule was inadequate to locate a sufficient number of tier 1 sites. Any community water system which includes tier 3 sampling sites in its sampling pool shall demonstrate in such a letter why it was unable to locate a sufficient number of tier 1 and tier 2 sampling sites.

(B) Monitoring requirements for lead and copper in tap water. Sample collection methods:

(i) All tap samples for lead and copper collected in accordance with this paragraph shall be first draw samples.

(ii) Each first-draw tap sample for lead and copper shall be one liter in volume and have stood motionless in the plumbing system of each sampling site for at least six hours. First-draw samples from residential housing shall be collected from the cold-water kitchen tap or bathroom sink tap. First-draw samples from a non-residential building shall be one liter in volume and shall be collected at an interior tap from which water is typically drawn for consumption. First-draw samples may be collected by the system or the system may allow residents to collect first-draw samples after instructing the residents of the sampling procedures specified in this paragraph. To avoid problems of residents handling nitric acid, acid fixation of first draw samples may be done up to 14 days after the sample is collected. If a system allows residents to perform sampling, the system may not challenge, based on alleged errors in sample collection, the accuracy of sampling results.

(iii) A water system shall collect each first-draw tap sample from the same sampling site from which it collected a previous sample. If, for any reason, the water system cannot gain entry to a sampling site in order to collect a follow-up tap sample, the system may collect the follow-up tap sample from another sampling site in its sampling pool as long as the new site meets the same targeting criteria, and is within reasonable proximity of the original site.

(C) Monitoring requirements for lead and copper in tap water. Number of samples: Water systems shall collect at least one sample during each monitoring period specified in paragraph (2)(c)(D) of this rule from the number of sites listed in the first column below ("standard monitoring"). A system conducting reduced monitoring under

subparagraph (2)(c)(D)(iv) of this rule shall collect at least one sample from the number of sites specified in the second column below during each monitoring period specified in subparagraph (2)(c)(D)(iv) of this rule. Such reduced monitoring sites shall be representative of the sites required for standard monitoring. A system that has fewer than five drinking water taps, that can be used for human consumption meeting the sample site criteria of paragraph (2)(c)(A) of this rule to reach the required number of sample sites, must collect at least one sample from each tap and then must collect additional samples from those taps on different days during the monitoring period to meet the required number of sites. Alternatively the Authority may allow these public water systems to collect a number of samples less than the number of sites specified below provided that 100 percent of all taps that can be used for human consumption are sampled. The Authority must approve this reduction of the minimum number of samples in writing based on a request from the system or onsite verification by the Authority. The Authority may specify sampling locations when a system is conducting reduced monitoring.

System Size — (# People Served) —	# of sites — (Standard Monitoring) —	# of sites (Reduced Monitoring)
>100,000 —	100 —	50
10,001 to 100,000 —	60 —	30
3,301 to 10,000 —	40 —	20
501 to 3,300 —	20 —	10
101 to 500 —	10 —	5
≤100 —	5 —	5

(D) Monitoring requirements for lead and copper in tap water. Timing of monitoring:

(i) Initial tap monitoring requirements:

(I) All large systems shall monitor during two consecutive six-month periods.

(II) All small and medium-size systems shall monitor during each six-month monitoring period until the system exceeds the lead or copper action level and is therefore required to implement the corrosion control treatment requirements specified in OAR 333-061-0034(2), in which case the system shall continue monitoring in accordance with subparagraph (2)(c)(D)(ii) of this rule, or the system meets the lead and copper action levels during two consecutive six-month monitoring periods, in which case the system may reduce monitoring in accordance with subparagraph (2)(c)(D)(iv) of this rule.

(ii) Monitoring after installation of corrosion control and source water treatment.

(I) Any large (serving more than 50,000 persons) system which installs optimal corrosion control treatment pursuant to OAR 333-061-0034(2)(a)(D) shall monitor during two consecutive six-month monitoring periods by the date specified in 333-061-0034(2)(a)(E).

(II) Any small (serving 3,300 people or less) or medium-size (serving 3,301 to 50,000 persons) system which installs optimal corrosion control treatment pursuant to OAR 333-061-0034(2)(b)(E) shall monitor during two consecutive six-month monitoring periods by the date specified in 333-061-0034(2)(b)(F).

(III) Any system which installs source water treatment pursuant to OAR 333-061-0034(4)(a)(C) shall monitor during two consecutive six-month monitoring periods by the date specified in 333-061-0034(4)(a)(D).

(iii) Monitoring after the Authority specifies water quality parameter values for optimal corrosion control. After the Authority specifies the values for water quality control parameters under OAR 333-061-0034(3)(l), the system shall monitor during each subsequent six-month monitoring period, with the first monitoring period to begin on the date the Authority specifies the optimal values.

(iv) Reduced monitoring

(I) A small or medium-size water system that meets the lead and copper action levels during each of two consecutive six-month monitoring periods may reduce the number of samples in accordance with paragraph (2)(c)(C) of this rule, and reduce the frequency of sampling to once per year. A small or medium water system collecting fewer than five samples as specified in (2)(c)(C) of this rule that meets the lead and copper action levels during each of two consecutive six-month monitoring periods may reduce the frequency of sampling to once per year. In no case can the system reduce the number of samples required below the minimum of one sample per available tap. This sampling shall begin during the calendar year immediately following the end of the second consecutive six-month monitoring period.

(II) Any water system that meets the lead action level and maintains the range of values for the water quality

control parameters reflecting optimal corrosion control treatment specified by the Authority during each of two consecutive six-month monitoring periods may reduce the frequency of monitoring to once per year and reduce the number of lead and copper samples in accordance with paragraph (2)(c)(C) of this rule if it receives written approval from the Authority. This sampling shall begin during the calendar year immediately following the end of the second consecutive six-month monitoring period. The Authority shall review monitoring, treatment, and other relevant information submitted by the water system, and shall notify the system in writing when it determines the system is eligible to commence reduced monitoring. The Authority shall review, and where appropriate, revise its determination when the system submits new monitoring or treatment data, or when other data relevant to the number and frequency of tap sampling becomes available.

(III) A small or medium-size water system that meets the lead and copper action levels during three consecutive years of monitoring may reduce the frequency of monitoring for lead and copper from annually to once every three years. Any water system that meets the lead action level and maintains the range of values for the water quality control parameters reflecting optimal corrosion control treatment specified by the Authority during three consecutive years of monitoring may reduce the frequency of monitoring from annually to once every three years if it receives written approval from the Authority. Samples collected once every three years shall be collected no later than every third calendar year. The Authority shall review monitoring, treatment, and other relevant information submitted by the water system and shall notify the system in writing when it determines the system is eligible to reduce the frequency of monitoring to once every three years. The Authority shall review, and where appropriate, revise its determination when the system submits new monitoring or treatment data, or when other data relevant to the number and frequency of tap sampling becomes available.

(IV) A water system that reduces the number and frequency of sampling shall collect these samples from representative

sites included in the pool of targeted sampling sites identified in paragraph (2)(c)(A) of this rule. Systems sampling annually or less frequently shall conduct the lead and copper tap sampling during the months of June, July, August or September. The Authority may approve a different period for conducting the lead and copper tap sampling for systems collecting a reduced number of samples. Such a period shall be no longer than four consecutive months and must represent a time of normal operation where the highest levels of lead are most likely to occur. For a non-transient non-community water system that does not operate during the months of June through September, and for which the period of normal operation where the highest levels of lead are most likely to occur is not known, the Authority shall designate a period that represents a time of normal operation for the system. This sampling shall begin during the period approved or designated by the Authority in the calendar year immediately following the end of the second consecutive six-month monitoring period for systems initiating annual monitoring and during the three-year period following the end of the third consecutive calendar year of annual monitoring for systems initiating triennial monitoring. Community and non-transient non-community water systems monitoring annually or triennially that have been collecting samples during the months of June through December and that receive Authority approval to alter their sample collection period must collect their next round of samples during a time period that ends no later than 21 months or 45 months, respectively, after the previous round of sampling. Subsequent rounds of sampling must be collected annually or triennially as required in this subsection.

(V) A small or medium-size water system subject to reduced monitoring that exceeds the lead or copper action level shall resume sampling in accordance with subparagraph (2)(c)(D)(iii) of this rule and collect the number of samples specified for standard lead and copper monitoring in paragraph (2)(c)(C) of this rule and shall also conduct water quality parameter monitoring in accordance with subparagraphs (2)(c)(F)(iii), (iv) or (v) of this rule, as appropriate, during the period in which the

lead or copper action level was exceeded. Any such system may resume annual monitoring for lead and copper at the tap at the reduced number of sites after it has completed two subsequent consecutive six-month rounds of monitoring that meet the requirement of subparagraph (2)(c)(D)(iv)(I) of this rule. This sampling shall begin during the calendar year immediately following the end of the second consecutive six-month monitoring period. Any such system may resume triennial monitoring for lead and copper at the reduced number of sites after it demonstrates through subsequent rounds of monitoring that it meets the criteria prescribed in subparagraphs (2)(c)(D)(iv)(III) or (VI) of this rule. Any water system subject to reduced monitoring frequency that fails to meet the lead action level during any four-month monitoring period or that fails to operate at or above the minimum value or within the range of values for the water quality control parameters specified by the Authority for more than nine days in any six-month period specified in subparagraph (2)(c)(F)(v) of this rule shall conduct tap water sampling for lead and copper at the frequency specified in subparagraph (2)(c)(D)(iii) of this rule, collect the number of samples specified for standard monitoring, and shall resume monitoring for water quality parameters within the distribution system in accordance with subparagraph (2)(c)(F)(v) of this rule. This standard tap water sampling shall begin no later than the six-month monitoring period beginning January 1 of the calendar year following the lead action level exceedance or water quality parameter excursion. Such a system may resume reduced monitoring for lead and copper at the tap and for water quality parameters within the distribution system under the following conditions Such a system may, with written Authority approval, resume reduced annual monitoring for lead and copper at the tap after it has completed two subsequent six-month rounds of tap lead and copper monitoring that meet the criteria specified in subparagraph (2)(c)(D)(iv)(II) of this rule. This sampling shall begin during the calendar year immediately following the end of the second consecutive six-month monitoring period. Such a system, with written Authority

approval, may resume reduced triennial monitoring for lead and copper at the tap if it meets the criteria specified in subparagraphs (2)(c)(D)(iv)(III) and (VI) of this rule. Such a system may reduce the number and frequency of water quality parameter distribution tap samples required in accordance with subparagraph (2)(c)(F)(vi)(I) and (II) of this rule. Such a system may not resume triennial monitoring for water quality parameters distribution tap samples until it demonstrates that it has re-qualified for triennial monitoring.

(VI) Any water system that demonstrates for two consecutive 6-month monitoring periods that the 90th percentile lead level is less than or equal to 0.005 mg/l and the 90th percentile copper level is less than or equal to 0.65 mg/l may reduce the number of samples in accordance with paragraph (2)(c)(C) of this rule and reduce the frequency of sampling to once every three calendar years.

(VII) Any water system subject to a reduced monitoring frequency under (2)(c)(D)(iv) of this rule shall notify the Authority in writing of any upcoming long-term change in treatment or addition of a new source. The Authority must review and approve the addition of a new source or long-term change in water treatment before it is implemented by the water system. The Authority may require the system to resume standard monitoring or take other appropriate steps such as increased water quality parameter monitoring or re-evaluation of its corrosion control treatment given the potentially different water quality considerations.

(E) Monitoring requirements for lead and copper in tap water. Additional monitoring by systems: The results of any monitoring conducted in addition to the minimum requirements of subsection (c) of this rule shall be considered by the system and the Authority in making any determinations (that is, calculating the 90th percentile lead or copper level). The Authority may invalidate lead and copper tap water samples as follows:

(i) The Authority may invalidate a lead or copper tap sample if at least one of the following conditions is met. The decision and the rationale for the decision must be documented in writing by the Authority. A sample invalidated by the Authority does not count toward determining lead or copper 90th percentile levels or toward meeting the minimum monitoring requirements:

(I) The laboratory establishes that improper sample analysis caused erroneous results; or

(II) A site that did not meet the site selection criteria; or

(III) The sample container was damaged in transit; or

(IV) There is substantial reason to believe that the sample was subject to tampering.

(ii) The system must report the results of all samples to the Authority and all supporting documentation for samples the system believes should be invalidated.

(iii) The Authority may not invalidate a sample solely on the grounds that a follow-up sample result is higher or lower than that of the original sample.

(iv) The water system must collect replacement samples for any samples invalidated if, after the invalidation of one or more samples, the system has too few samples to meet the minimum requirements. Any such replacement samples must be taken as soon as possible, but no later than 20 days after the date the Authority invalidates the sample. The replacement samples shall be taken at the same locations as the invalidated samples or, if that is not possible, at locations other than those already used for sampling during the monitoring period.

(F) Monitoring requirements for water quality parameters. All large water systems and all medium and small water systems that exceed the lead or copper action levels shall monitor water quality parameters in addition to lead and copper as follows:

(i) General Requirements. Sample collection methods:

(I) Tap samples shall be representative of water quality throughout the distribution system taking into account the number of persons served, the different sources of water, the different treatment methods employed by the system, and seasonal variability. Water quality parameter sampling is not required to be conducted at taps targeted for lead and copper sampling, however, established coliform sampling sites may be used to satisfy these requirements.

(II) Samples collected at the entry point(s) to the distribution system shall be from locations representative of each source after treatment. If a system draws water from more than one source and the sources are combined before distribution, the system must sample at an entry point to the distribution system during periods of normal

operating conditions when water is representative of all sources being used.

(ii) General requirements. Number of samples:

(I) Systems shall collect two tap samples for applicable water quality parameters during each monitoring period specified under subparagraphs (2)(c)(F)(iii) through (vi) of this rule from the following number of sites.

System Size # People served —	# of Sites For Water Quality Parameters
>100,000 —	25
10,001-100,000 —	10
3,301 to 10,000 —	3
501 to 3,300 —	2
101 to 500 —	1
<100 —	1

(II) Except as provided in subparagraph (2)(c)(F)(iv)(III) of this rule, systems shall collect two samples for each applicable water quality parameter at each entry point to the distribution system during each monitoring period specified in subparagraph (2)(c)(F)(iii) of this rule. During each monitoring period specified in subparagraphs (2)(c)(F)(iv) through (vi) of this rule, systems shall collect one sample for each applicable water quality parameter at each entry point to the distribution system.

(iii) Initial Sampling. All large water systems shall measure the applicable water quality parameters as specified below at taps and at each entry point to the distribution system during each six-month monitoring period specified in subparagraph (2)(c)(D)(i) of this rule. All small and medium-size systems shall measure the applicable water quality parameters at the locations specified below during each six-month monitoring period specified in subparagraph (2)(c)(D)(i) of this rule during which the system exceeds the lead or copper action level:

(I) At taps: pH, alkalinity, orthophosphate (when an inhibitor containing a phosphate compound is used), silica (when an inhibitor containing a silicate compound is used), calcium, conductivity, and water temperature.

(II) At each entry point to the distribution system: all of the applicable parameters listed in subparagraph (2)(c)(F)(iii)(I) of this rule.

(iv) Monitoring after installation of corrosion control. Any large system which installs optimal corrosion control treatment pursuant to OAR 333-061-0034(2)(a)(D) shall measure the water quality parameters at the locations and frequencies specified below during each six-month monitoring period specified in subparagraph (2)(c)(D)(ii)(I) of this rule. Any small or medium-size system which installs optimal corrosion control treatment shall conduct such monitoring during each six-month monitoring period specified in subparagraph (2)(c)(D)(ii)(II) of this rule in which the system exceeds the lead or copper action level.

(I) At taps, two samples for: pH, alkalinity, orthophosphate (when an inhibitor containing a phosphate compound is used), silica (when an inhibitor containing a silicate compound is used), calcium (when calcium carbonate stabilization is used as part of corrosion control).

(II) Except as provided in subparagraph (2)(c)(D)(iv)(III) of this rule, at each entry point to the distribution system, at least one sample, no less frequently than every two weeks (bi-weekly) for: pH; when alkalinity is adjusted as part of optimal corrosion control, a reading of the dosage rate of the chemical used to adjust alkalinity, and the alkalinity concentration; and when a corrosion inhibitor is used as part of optimal corrosion control, a reading of the dosage rate of the inhibitor used, and the concentration of orthophosphate or silica (whichever is applicable).

(III) Any ground water system can limit entry point sampling to those entry points that are representative of water quality and treatment conditions throughout the system. If water from untreated ground water sources mixes with water from treated ground water sources, the system must monitor for water quality parameters both at representative entry points receiving treatment and no treatment. Prior to the start of any monitoring, the system shall provide to the Authority written information identifying the selected entry points and documentation, including information on seasonal variability, sufficient to demonstrate that the sites are representative of water quality and treatment conditions throughout the system.

(v) Monitoring after Authority specifies water quality parameter values for optimal corrosion control. After the Authority

specifies the values for applicable water quality control parameters reflecting optimal corrosion control treatment under OAR 333-061-0034(3)(l), all large systems shall measure the applicable water quality parameters in accordance with subparagraph (2)(c)(F)(iv) of this rule and determine compliance every six months with the first six-month period to begin on either January 1 or July 1, whichever comes first, after the Authority specifies optimal water quality parameter values. Any small or medium-size system shall conduct such monitoring during each monitoring period specified in this paragraph in which the system exceeds the lead or copper action level. For any such small and medium-size system that is subject to a reduced monitoring frequency pursuant to subparagraph (2)(c)(D)(iv) of this rule at the time of the action level exceedance, the start of the applicable six-month monitoring period shall coincide with the start of the applicable monitoring period under (2)(c)(D) of this rule. Compliance with Authority-designated optimal water quality parameter values shall be determined as specified under 333-061-0034(3)(m).

(vi) Reduced monitoring:

(I) Any water system that maintains the range of values for the water quality parameters reflecting optimal corrosion control treatment during each of two consecutive six-month monitoring periods under paragraph (2)(c)(D) of this rule shall continue monitoring at the entry point(s) to the distribution system as specified in subparagraph (2)(c)(F)(iv)(II) of this rule. Such system may collect two tap samples for applicable water quality parameters from the following reduced number of sites during each six-month monitoring period.

System Size# People served —	Reduced # of Sites for Water Quality Parameters
>100,000 —	10
10,001-100,000 —	7
3,301 to 10,000 —	3
501 to 3,300 —	2
101 to 500 —	1
<100 —	1

(II) Any water system that maintains the minimum values or maintains the range of values for the water quality parameters reflecting optimal corrosion control treatment specified by the Authority under OAR 333-061-0034(3) (l)

during three consecutive years of monitoring may reduce the frequency with which it collects the number of tap samples for applicable water quality parameters specified in subparagraph (2)(c)(F)(vi)(I) of this rule from every six months to annually. This sampling begins during the calendar year immediately following the end of the monitoring period in which the third consecutive year of six-month monitoring occurs. Any water system that maintains the minimum values or maintains the range of values for the water quality parameters reflecting optimal corrosion control treatment specified by the Authority under 333-061-0034(3)(l) during three consecutive years of annual monitoring may reduce the frequency with which it collects the number of tap samples for applicable water quality parameters from annually to every three years. This sampling begins no later than the third calendar year following the end of the monitoring period in which the third consecutive year of monitoring occurs.

(III) A water system may reduce the frequency with which it collects tap samples for applicable water quality parameters to every three years if it demonstrates during two consecutive monitoring periods that its tap water lead level at the 90th percentile is less than or equal to 0.005 mg/l, that its tap water copper level at the 90th percentile is less than or equal to 0.65 mg/l, and that it also has maintained the range of values for water quality parameters reflecting optimal corrosion control treatment specified by the Authority. Monitoring conducted every three years shall be done no later than every third calendar year.

(IV) A water system that conducts sampling annually shall collect these samples evenly throughout the year so as to reflect seasonal variability.

(V) Any water system subject to reduced monitoring frequency that fails to operate at or above the minimum value or within the range of values for the water quality parameters specified by the Authority under OAR 333-061-0034(3)(l) for more than nine days in any six-month period shall resume distribution system tap water sampling in accordance with the number and frequency requirements in subparagraph (2)(c)(F)(v) of this rule. Such a system may resume annual monitoring for water

quality parameters at the tap at the reduced number of sites after it has completed two subsequent consecutive six-month rounds of monitoring that meet the criteria specified in subparagraph (2)(c)(F)(v) of this rule or may resume triennial monitoring at the reduced number of sites after it demonstrates through subsequent annual rounds that it meets the criteria of subparagraphs (2)(c)(F)(vi)(I) and (II) of this rule.

(vii) Additional monitoring by systems. The results of any monitoring conducted in addition to the minimum requirements of subsection (2)(c) of this rule shall be considered by the system and the Authority in making any determinations.

(G) Monitoring requirements for lead and copper in source water. Sample location, collection methods, and number of samples:

(i) A water system that fails to meet the lead or copper action level on the basis of tap samples collected in accordance with paragraphs (2)(c)(A) through (E) of this rule shall collect lead and copper source water samples in accordance with the following requirements regarding sample location, number of samples, and collection methods:

(I) Ground water systems shall take a minimum of one sample at every entry point to the distribution system which is representative of each well after treatment. The system shall take each sample at the same sampling point unless conditions make another sampling point more representative of each source or treatment plant;

(II) Surface water systems shall take a minimum of one sample at every entry point to the distribution system after any application of treatment or in the distribution system at a point which is representative of each source, after treatment. The system shall take each sample at the same sampling point unless conditions make another sampling point more representative of each source or treatment plant; Surface water systems include systems with a combination of surface and ground sources; and

(III) If a system draws water from more than one source and the sources are combined before distribution, the system must sample at an entry point to the distribution system during periods when water is representative of all sources being used.

(ii) Where the results of sampling indicate an exceedance of maximum permissible source water levels established under

OAR 333-061-0034(4)(b)(D) the Authority may require that one additional sample be collected as soon as possible after the initial sample was taken (but not to exceed two weeks) at the same sampling point. If an Authority-required confirmation sample is taken for lead or copper, then the results of the initial and confirmation sample shall be averaged in determining compliance with the Authority-specified maximum permissible levels. Any sample value below the detection limit shall be considered to be zero. For lead any value above the detection limit but below the Practical Quantitation Level (PQL) (0.005 mg/l) shall either be considered as the measured value or be considered one-half the PQL (0.0025 mg/l). For copper any value above the detection limit but below the PQL (0.050 mg/l) shall either be considered as the measured value or be considered one-half the PQL (0.025 mg/l).

(H) Monitoring requirements for lead and copper in source water. Monitoring frequency after system exceeds tap water action level. Any system which exceeds the lead or copper action level at the tap, shall collect one source water sample from each entry point to the distribution system no later than six months after the end of the monitoring period during which the lead or copper action level was exceeded. For monitoring periods that are annual or less frequent, the end of the monitoring period is September 30 of the calendar year in which the sampling occurs, or if the Authority has established an alternate monitoring period, the last day of that period.

(i) Monitoring frequency after installation of source water treatment. Any system which installs source water treatment pursuant to OAR 333-061-0034(4)(a)(C) shall collect an additional source water sample from each entry point to the distribution system during two consecutive six-month monitoring periods by the deadline specified in 333-061-0034(4)(a)(D).

(ii) Monitoring frequency after Authority specifies maximum permissible source water levels or determines that source water treatment is not needed.

(I) A system shall monitor at the frequency specified below in cases where the Authority specifies maximum permissible source water levels under OAR 333-061-0034(4)(b)(D) or determines that the system is not required to install source water treatment under 333-061-0034(4)(b)(B). A water system using only groundwater shall collect samples once during the three-year

compliance period in effect when the applicable Authority determination is made. Such systems shall collect samples once during each subsequent compliance period. Triennial samples shall be collected every third calendar year. A water system using surface water (or a combination of surface and groundwater) shall collect samples once during each calendar year, the first annual monitoring period to begin during the year in which the applicable Authority determination is made.

(II) A system is not required to conduct source water sampling for lead or copper if the system meets the action level for the specific contaminant in tap water samples during the entire source water sampling period applicable to the system under subparagraph (2)(c)(H)(ii)(I) of this rule.

(iii) Reduced monitoring frequency:

(I) A water system using only groundwater may reduce the monitoring frequency for lead and copper in source water to once during each nine-year compliance cycle provided that the samples are collected no later than every ninth calendar year and it demonstrates that finished drinking water entering the distribution system has been maintained below the maximum permissible lead and copper concentrations specified by the Authority in OAR 333-061-0034(4)(b)(D) during at least three consecutive compliance periods under subparagraph (2)(c)(H)(ii)(I) of this rule or the Authority has determined that source water treatment is not needed and the system demonstrates during at least three consecutive compliance periods under subparagraph (2)(c)(H)(ii)(I) of this rule that the concentration of lead in source water was less than or equal to 0.005 mg/l and the concentration of copper in source water was less than or equal to 0.65 mg/l.

(II) A water system using surface water (or a combination of surface and ground waters) may reduce the monitoring frequency for lead and copper in source water to once during each nine-year compliance cycle provided that the samples are collected no later than every ninth calendar year and it demonstrates that finished drinking water entering the distribution system has been maintained below the maximum permissible lead and copper

concentrations specified by the Authority in OAR 333-061-0034(4)(b)(D) for at least three consecutive years or the Authority has determined that source water treatment is not needed and the system demonstrates that during at least three consecutive years the concentration of lead in source water was less than or equal to 0.005 mg/l and the concentration of copper in source water was less than or equal to 0.65 mg/l.

(III) A water system that uses a new source of water is not eligible for reduced monitoring for lead or copper until concentrations in samples collected from the new source during three consecutive monitoring periods are below the maximum permissible lead and copper concentrations specified by the Authority in OAR 333-061-0034(4)(a)(E).

(d) Nitrate:

(A) Community and non-transient non-community water systems using surface water sources or groundwater sources under the direct influence of surface water shall monitor for Nitrate on a quarterly basis, at each point in the distribution system representative of each source after treatment or at entry points to the distribution system after any application of treatment, beginning January 1, 1993. The Authority may allow a surface water system to reduce the sampling frequency to annually provided that all analytical results from four consecutive quarters are less than 50 percent of the MCL. A surface water system shall return to quarterly monitoring if any one sample is 50 percent of the MCL.

(B) Community and non-transient non-community water systems using groundwater sources shall monitor for Nitrate annually, at each point in the distribution system representative of each source after treatment or at entry points to the distribution system after any application of treatment, beginning January 1, 1993. The Authority shall require quarterly monitoring for a least one year following any one sample in which the concentration is 50 percent of the MCL. The system may return to annual monitoring after four consecutive quarterly samples are found to be reliably and consistently below the MCL.

(C) Transient non-community and state regulated water systems shall monitor for Nitrate annually, at each point in the distribution system representative of each source after treatment or at entry points to the distribution system after any application of treatment, beginning January 1, 1993. Transient non-community water systems must monitor quarterly for at least one year following any one sample in

which the concentration is 50 percent of the MCL. The system may return to annual monitoring after four consecutive quarterly samples are found to be reliably and consistently below the MCL.

(D) After the initial round of quarterly sampling is completed, each community and non-transient non-community water system which is monitoring annually shall take subsequent samples during the quarter(s) which previously resulted in the highest analytical result.

(e) Nitrite:

(A) Community, non-transient non-community, and transient non-community water systems shall collect one sample for Nitrite at each point in the distribution system representative of each source after treatment or at entry points to the distribution system after any application of treatment during the compliance period beginning January 1, 1993.

(B) After the initial sample, all systems where analytical results for Nitrite are <50 percent of the MCL, shall monitor once during each subsequent compliance period.

(C) Water systems must conduct quarterly monitoring for at least one year following any one sample in which the concentration is ≥50 percent of the MCL. A water system may change to annual monitoring after four consecutive quarterly samples are found to be reliably and consistently below 50 percent of the MCL.

(D) A water system with an analytical result ≥50 percent of the MCL may never monitor less frequently than annually. Systems which are monitoring annually must collect each subsequent sample during the quarter(s) which previously resulted in the highest analytical result.

(E) The Authority may grant a waiver from the monitoring frequency specified in paragraph (2)(e)(B) of this rule provided that water systems have conducted a minimum of three rounds of monitoring (at least one sample shall have been collected since January 1, 1993), and all analytical results are less than 50 percent of the MCL prescribed in OAR 333-061-0030. Water systems that have been granted a waiver must monitor once during each nine-year compliance cycle. Waivers must be granted as prescribed by subparagraph (2)(a)(C)(ii) of this rule.

(F) A water system with two or more wells that have been determined to constitute a "wellfield" as specified in subsection (1)(k) of this rule may reduce sampling to only those entry point(s) designated by the Authority.

(f) Sodium:

(A) Samples of water which is delivered to users shall be analyzed for Sodium as follows:

(i) Community and non-transient non-community water systems, surface water sources, once per year for each source;

(ii) Community and non-transient non-community water systems, ground water sources, once every three years for each source.

(B) The water supplier shall report to the Authority the results of the analyses for Sodium as prescribed in OAR 333-061-0040. The Authority shall notify local health officials of the test results.

(g) Confirmation Samples:

(A) Where the results of sampling for antimony, arsenic, asbestos, barium, beryllium, cadmium, chromium, cyanide, fluoride, mercury, nickel, selenium or thallium exceed the MCL prescribed in OAR 333-061-0030 for inorganic chemicals, the Authority may require one additional sample to be taken as soon as possible after the initial sample was taken (but not to exceed two weeks) at the same sampling point.

(B) Where the results of sampling for nitrate or nitrite exceed the MCL prescribed in OAR 333-061-0030 for inorganic chemicals, the system is required to collect one additional sample within 24 hours of notification of the results of the initial sample at the same sampling point. Systems unable to comply with the 24-hr sampling requirement must initiate consultation with the Authority as soon as practical, but no later than 24 hours after the system learns of the violation and must immediately notify their users as prescribed in OAR 333-061-0042(2)(a)(B), and collect one additional sample within two weeks of notification of the results of the initial sample.

(C) If a confirmation sample required by the Authority is taken for any contaminant then the results of the initial and confirmation sample shall be averaged. The resultant average shall be used to determine the system's compliance as prescribed in subsection (2)(i) of this rule.

(h) The Authority may require more frequent monitoring than specified in subsections (2)(a) through (f) of this rule or may require confirmation samples for positive and negative results. Systems may apply to the Authority to conduct more frequent monitoring than is required in this section.

(i) Compliance with the inorganic MCLs as listed in OAR 333-061-0030(1) (Table 1) shall be determined based on the analytical result(s) obtained at each sampling point as follows:

(A) For systems which are conducting monitoring at a frequency greater than annual, compliance with the MCLs for antimony, arsenic, asbestos, barium, beryllium, cadmium, chromium, cyanide, fluoride, mercury, nickel, selenium or thallium is determined by a running annual average at any sampling point. If the average at any sampling

point rounded to the same number of significant figures as the MCL for the substance in question is greater than the MCL, then the system is out of compliance. If any one sample would cause the annual average to be exceeded, then the system is out of compliance immediately. Any sample with results below the detection limit specified for the approved EPA analytical method shall be calculated at zero for the purpose of determining the annual average. If a system fails to collect the required number of samples, compliance (average concentration) will be based on the total number of samples collected.

(B) Systems monitoring annually or less frequently for antimony, arsenic, asbestos, barium, beryllium, cadmium, chromium, cyanide, fluoride, mercury, nickel, selenium or thallium must begin quarterly sampling if the level of a contaminant at any sampling point is greater than the MCL listed in OAR 333-061-0030(1). The water system will then determine compliance with the MCL by running annual average at the sampling point. The water system will not be considered in violation of the MCL until it has completed one year of quarterly monitoring. If any sample result will cause the running annual average to exceed the MCL at any sampling point, the system is out of compliance with the MCL immediately. If a system fails to collect the required number of samples, compliance (average concentration) will be based on the total number of samples collected.

(C) Compliance with MCLs for nitrate and nitrite is determined based on one sample if the levels of these contaminants are below the MCLs. If the levels of nitrate or nitrite exceed the MCLs in the initial sample, a confirmation sample is required in accordance with paragraph (2)(g)(B) of this rule and compliance shall be determined based on the average of the initial and confirmation samples.

(D) If the results of an analysis as prescribed in this rule indicate the level of any contaminant exceeds the maximum contaminant level, the water supplier shall report the analysis results to the Authority within 48 hours as prescribed in OAR 333-061-0040 and initiate the public notice procedures as prescribed by OAR 333-061-0042.

(E) A water system's running annual average (RAA) is calculated by averaging the analytical results for the current monitoring period and the previous monitoring periods within a one-year time frame. For water systems monitoring less frequently than quarterly, the first sample result that exceeds the MCL is considered to be the initial sampling result for determination of the RAA. Multiple sample results within any monitoring period will be averaged and then rounded to the same number of significant figures as the MCL of the contaminant in question. For the purposes of calculating a RAA, a monitoring

period may be a calendar month or calendar quarter. Special samples, as described by paragraph (1)(h)(C) of this rule, will not be included in the calculation of a system's running annual average.

(3) Organic chemicals:

(a) Water suppliers responsible for community and non-transient non-community water systems must conduct monitoring according to this section for the following regulated synthetic organic chemicals (SOC): Alachlor, Atrazine, Benzo(a)pyrene, Carbofuran, Chlordane, Dalapon, Dibromochloropropane, Dinoseb, Dioxin(2,3,7,8-TCDD), Diquat, Di(2-ethylhexyl)adipate, Di(2-ethylhexyl)phthalate, Endothall, Endrin, Ethylene dibromide, Glyphosate, Heptachlor, Heptachlor epoxide, Hexachlorobenzene, Hexachlorocyclopentadiene, Lindane(BHC-g), Methoxychlor, Oxamyl(Vydate), Picloram, Polychlorinated biphenyls, Pentachlorophenol, Simazine, Toxaphene, 2,4-D and 2,4,5-TP Silvex.

(A) Initial sampling

(i) At sampling points served by surface water or GWUDI sources, samples must be collected at each point in the distribution system representative of each source after treatment or at entry points to the distribution system after any application of treatment. At least four consecutive quarterly samples must be collected at each sampling point during each compliance period. Samples must be collected from the same sampling point unless conditions make another sampling point more representative of each source or treatment plant.

(ii) At sampling points served by groundwater sources only, samples must be collected at every entry point to the distribution system after any application of treatment. Samples must be collected annually for three consecutive years at each sampling point during each compliance period. Samples must be collected from the same sampling point unless conditions make another sampling point more representative of each source or treatment plant. New wells in an existing wellfield, within an existing drinking water protection area, or within an area well characterized by area-wide source water assessments or past monitoring results as determined by the Authority, may be eligible for a reduction in initial monitoring from three consecutive annual samples to one sample if no detections occur and if, based on the system's source water assessment, the Authority determines that the new well is producing from the same and only the same aquifer or does not significantly modify the existing drinking water protection area.

(iii) If a system draws water from more than one source and sources are combined before distribution, samples must be collected at an entry point to the distribution system during periods of normal operating conditions when water is representative of all the sources being used.

(iv) At water systems with two or more wells that have been determined to constitute a wellfield as specified in subsection (1)(k) of this rule, sampling may be reduced to only those entry points designated by the Authority.

(B) If the initial analyses as specified in subparagraphs (3)(a)(A)(i) or (ii) of this rule does not detect any contaminant listed in subsection (3)(a) of this rule, then monitoring at each sampling point should be conducted as follows:

(i) At water systems serving more than 3,300 people, two quarterly samples in the same calendar year during each repeat 3-year compliance period; or

(ii) At systems serving 3,300 people or less, one sample in each repeat 3-year compliance period.

(C) Water suppliers may apply to the Authority for a waiver from the monitoring frequencies specified in subparagraphs (3)(a)(A)(i) or (ii) or paragraph (3)(a)(B) of this rule. If the Authority determines there was no previous use of a contaminant within a watershed or zone of influence, a waiver may be granted. If the Authority determines that a contaminant was used previously or the use of a contaminant is unknown then the factors specified in subparagraph (3)(a)(C)(iii) of this rule shall determine whether a waiver is granted. A waiver must be in place prior to the year in which the monitoring is to be conducted. Water suppliers must reapply for a waiver for each compliance period. Regardless of waiver status, monitoring must occur at the minimum frequencies specified in subparagraph (3)(a)(C)(v) or (vi) of this rule.

(i) The drinking water protection area delineated during the source water assessment must be used according to Authority procedures and guidance.

(ii) For waivers based on the use of a contaminant, the criteria considered by the Authority includes but is not limited to the use, storage, distribution, transport and disposal of the contaminant within the delineated recharge or watershed area.

(iii) For waivers based on susceptibility to contamination, the criteria considered by the Authority includes but is not limited to the history of bacteria or nitrate contamination, well construction, agricultural management practices, infiltration

potential, contaminant mobility and persistence, previous analytical results, the proximity of the system to a potential point or non-point source of contamination, and use of PCBs in equipment used in the production, distribution, or storage of water.

(iv) The Authority may establish area-wide waivers based on historical monitoring data, land use activity, and the results of source water assessments or waivers based on use or susceptibility.

(v) Monitoring must be conducted at least once every six years for all SOCs if an Authority approved drinking water protection plan exists for the water system.

(vi) Monitoring must be conducted at least once every nine years for those SOCs not used within the drinking water protection area if no Authority approved drinking water protection plan exists for a water system. Monitoring must be conducted at least once every six years or once every nine years as determined by the Authority, for those SOCs used within the drinking water protection area based upon SOC chemical characteristics, aquifer characteristics and well construction.

(D) If a contaminant listed in subsection (3)(a) of this rule is detected at a water system equal to or greater than the minimum detection limit listed in Table 15, then the water supplier shall monitor quarterly at each sampling point where a detection occurred. If a contaminant is detected at a concentration greater than the maximum contaminant level, monitoring must be conducted as prescribed by paragraph (3)(a)(E) of this rule.

Table 15

Contaminant	Detection Limit (mg/l)
Alachlor	0.0002
Atrazine	0.0001
Benzo(a) pyrene	0.00002
Carbofuran	0.0009
Chlordane	0.0002
Dalapon	0.001
Di(2-ethylhexyl) adipate	0.0006
Di(2-ethylhexyl) phthalate	0.0006
Dibromochloropropane (DBCP)	0.00002
Dinoseb	0.0002
Dioxin(2,3,7,8-TCDD)	0.000000005
Diquat	0.0004
Endothall	0.009
Endrin	0.00001
Ethylene Dibromide (EDB)	0.00001

Glyphosate	0.006
Heptachlor	0.00004
Heptachlor Epoxide	0.00002
Hexachlorobenzene	0.0001
Hexachlorocyclopentadiene	0.0001
Lindane(BHC-g)	0.00002
Methoxychlor	0.0001
Oxamyl(Vydate)	0.002
Picloram	0.0001
Polychlorinated Biphenyls (PCBs) (as Decachlorobiphenyl)	0.0001
Pentachlorophenol	0.00004
Simazine	0.00007
Toxaphene	0.001
2,4-D	0.0001
2,4,5-TP (Silvex)	0.0002

(i) The Authority may reduce the monitoring frequency required by paragraph (3)(a)(D) of this rule to annually if at least two quarterly samples for groundwater sources or four quarterly samples for surface water sources are reliably and consistently below the MCL. Annual monitoring according to this subparagraph must be conducted during the quarter that previously yielded the highest analytical result.

(ii) At systems where three consecutive annual samples are collected with no detection of a contaminant, water suppliers may apply to the Authority for a waiver as specified in paragraph (3)(a)(C) of this rule. Monitoring may not be reduced to less often than annually except upon receipt of a waiver granted by the Authority.

(iii) If monitoring required by paragraphs (3)(a)(A) through (D) of this rule results in the detection of either Heptachlor or Heptachlor epoxide, then subsequent monitoring shall analyze for both contaminants.

(E) If a contaminant listed in subsection (3)(a) of this rule is detected at a concentration greater than the maximum contaminant level, then the water supplier must monitor quarterly. After a minimum of four quarterly samples, if results are reliably and consistently below the MCL and in compliance with paragraph (3)(a)(H) of this rule, then the water supplier may monitor annually.

(F) The Authority may require confirmation samples for positive or negative results. If a confirmation sample is required by the Authority, the result must be averaged with the original sample result (unless the previous sample has been invalidated by the Authority) and the average used to determine compliance.

(G) The Authority may allow compositing of samples to reduce the number of samples to be analyzed at a water system. Composite samples from a maximum of five sampling points are allowed, provided that the detection limit of the method used for analysis is less than one-fifth of the MCL. Compositing of samples must be conducted in the laboratory and analyzed within 14 days of sample collections. If the concentration in the composite sample detects one or more contaminants listed in subsection (3)(a) of this rule, then a follow-up sample must be collected and analyzed within 14 days at each sampling point included in the composite, and be analyzed for that contaminant. Duplicates collected for the original composite samples may be used instead of re-sampling provided the duplicates are analyzed and the results reported to the Authority within 14 days of collection. For water systems serving more than 3,300 people, the Authority may allow compositing at sampling points only within a single system. For systems serving 3,300 people or less, the Authority may allow compositing among different systems, provided the 5-sample limit is maintained.

(H) Compliance with contaminants listed in OAR 333-061-0030(2)(a) shall be determined based on the analytical results obtained at each sampling point. If one sampling point is in violation of an MCL, the water system is in violation of the MCL. For systems which monitor more than once per year, compliance with the MCL is determined by a running annual average at each sampling point. At systems where annual or less frequent monitoring takes place, if sample results exceed the regulatory detection limit prescribed in paragraph (3)(a)(D) of this rule (Table 15), monitoring must be increased to quarterly. The system will not be considered in violation of the MCL until it has completed one year of quarterly monitoring. If any single sample result will cause the running annual average to exceed the MCL at any sampling point, the system is out of compliance with the MCL immediately. If a system fails to collect the required number of samples, compliance will be based on the total number of samples collected. If a sample result is less than the detection limit, zero will be used to calculate the annual average. If the system is out of compliance, the system shall follow the reporting and public notification procedures as prescribed in OAR 333-061-0040 and 333-061-0042(2)(b)(A).

(I) The running annual average (RAA) for a contaminant is calculated by averaging the analytical results for the current monitoring period and the previous monitoring periods within a one-year time frame. For water systems monitoring less frequently than quarterly, the first

sample result that exceeds the detection limit or MCL is considered to be the initial sampling result for determination of the RAA. Multiple sample results within any monitoring period will be averaged and then rounded to the same number of significant figures as the MCL for the contaminant in question. For the purposes of calculating a RAA, a monitoring period may be a calendar month or calendar quarter. Special samples, as described by paragraph (1)(h)(C) of this rule, will not be included in the calculation of the running annual average at a water system.

(J) All new systems or systems that use a new source of water must demonstrate compliance with the MCL within a period of time specified by the Authority. The system must also comply with the initial sampling frequencies specified by the Authority to ensure a system can demonstrate compliance with the MCL.

(b) Water suppliers responsible for community and non-transient non-community water systems must conduct monitoring according to this section for the following regulated volatile organic chemicals (VOCs): Benzene, Carbon tetrachloride, *cis*-1,2-Dichloroethylene, Dichloromethane, Ethylbenzene, Monochlorobenzene, *o*-Dichlorobenzene, *p*-Dichlorobenzene, Styrene, Tetrachloroethylene(PCE), Toluene, *trans*-1,2-Dichloroethylene, Trichloroethylene(TCE), Vinyl chloride, Xylenes(total), 1,1-Dichloroethylene, 1,1,1-Trichloroethane, 1,1,2-Trichloroethane, 1,2-Dichloroethane, 1,2-Dichloropropane, and 1,2,4-Trichlorobenzene.

(A) Initial monitoring:

(i) At sampling points served by surface water or GWUDI sources, samples must be collected at each point in the distribution system representative of each source after treatment or at entry points to the distribution system after any application of treatment. At least four consecutive quarterly samples must be collected at each sampling point during each compliance period. Samples must be collected from the same sampling point unless conditions make another sampling point more representative of each source or treatment plant.

(ii) At sampling points served by groundwater sources only, samples must be collected at every entry point to the distribution system after any application of treatment. Samples must be collected annually for three consecutive years at each sampling point during each compliance period. Samples must be collected from the same sampling point unless conditions make another sampling point more representative of each source or treatment plant. New wells in an existing wellfield, within an existing drinking water protection area, or within an

area well characterized by area-wide source water assessments or past monitoring results as determined by the Authority, may be eligible for a reduction in initial monitoring from three consecutive annual samples to one sample if no detections occur and if, based on the system's source water assessment, the Authority determines that the new well is producing from the same and only the same aquifer or does not significantly modify the existing drinking water protection area.

(iii) The Authority may designate additional sampling points within the distribution system or at the consumer's tap which more accurately determines consumer exposure to VOCs.

(iv) If a water system draws water from more than one source and the sources are combined before distribution, the samples must be collected at entry points to the distribution system during periods of normal operating conditions when water is representative of all sources being used.

(v) A water system with two or more wells that have been determined to constitute a wellfield as specified in subsection (1)(k) of this rule may reduce sampling to only those entry point(s) designated by the Authority.

(B) If the initial analyses conducted according to subparagraphs (3)(b)(A)(i) or (ii) of this rule do not detect any contaminant listed in subsection (3)(b) of this rule, then monitoring for all of the VOCs should be conducted as follows:

(i) For sampling points served by surface water or GWUDI sources, one sample every year per entry point; or

(ii) For sampling points served only by groundwater sources, one sample every three years per entry point.

(C) Water suppliers may apply to the Authority for a waiver from the monitoring frequencies specified in paragraph (3)(b)(B) of this rule. Waivers will be granted according to the criteria and procedures specified in subparagraphs (3)(a)(C)(i) through (vi) of this rule if the Authority determines there were no detections of any contaminant listed in subsection (3)(b) of this rule and if an Authority approved drinking water protection plan exists for the water system or for those VOCs used within a portion of the drinking water protection area that the Authority has determined is not susceptible to VOC contamination.

(i) Waivers granted for monitoring at groundwater systems shall be effective for no more than six years.

(I) Waivers must be in place prior to the year in which monitoring is to be conducted, and water suppliers must

reapply for a waiver from VOC monitoring every two compliance periods (six years).

(II) As a condition of a waiver, water suppliers must collect one sample at each sampling point during the time the waiver is in effect and update the vulnerability assessment for the water system addressing those factors listed in subparagraphs (3)(a)(C)(ii) and (iii) of this rule. The Authority must be able to confirm that a system is not susceptible within three years of the original determination, and every time the vulnerability assessment is updated, or the waiver is invalidated and monitoring must be conducted as specified in paragraph (3)(b)(B) of this rule.

(ii) At water systems using surface water that have been determined not to be vulnerable to VOC contamination by the Authority, monitoring must be conducted at the frequency prescribed by the Authority. Water suppliers must update the vulnerability assessment for such water systems during each compliance period and submit the vulnerability assessment to the Authority regardless of the frequency of monitoring.

(iii) The Authority may establish area-wide waivers based on historical monitoring data, land use activity, the results of source water assessments or waivers granted for use of VOCs or susceptibility to VOC contamination.

(D) If a contaminant listed in subsection (3)(b) of this rule (except vinyl chloride) is detected in any sample at a concentration greater than the minimum detection limit of 0.0005 mg/l, then the water supplier shall monitor quarterly at each sampling point where a detection occurred except as provided in subparagraph (3)(b)(D)(i) of this rule.

(i) The Authority may reduce the monitoring frequency specified in this paragraph to annually if results for the water system are reliably and consistently below the MCL for at least two quarters for sample points served only by groundwater sources and four quarters for sample points served by surface water or GWUDI sources.

(I) For annual monitoring, samples must be collected during the quarter that previously yielded the highest analytical result.

(II) If a contaminant is detected at a concentration greater than 0.0005 mg/l but below the MCL in one of the annual samples as prescribed by subparagraph (3)(b)(D)(i) of this rule, the water supplier shall monitor at the

frequency specified by the Authority but in no case less frequently than annually.

(ii) At water systems or sampling points where three consecutive annual samples are collected with no detection of a contaminant, water suppliers may apply to the Authority for a waiver as specified in paragraph (3)(b)(C) of this rule. Monitoring may not be reduced to less often than annually except upon by a waiver granted by the Authority.

(iii) At water systems using groundwater sources where one or more of the following two-carbon organic compounds was detected: trichloroethylene, tetrachloroethylene, 1,2-dichloroethane, 1,1,1-trichloroethane, *cis*-1,2-dichloroethylene, *trans*-1,2-dichloroethylene or 1,1-dichloroethylene, the water supplier shall monitor quarterly for vinyl chloride. A vinyl chloride sample shall be collected at each sampling point at which one or more of the two-carbon organic compounds was detected. If the results of the first analysis do not detect vinyl chloride, the Authority may reduce the quarterly monitoring frequency of vinyl chloride monitoring to one sample during each compliance period. Water suppliers responsible for surface water systems are required to monitor for vinyl chloride at the discretion of the Authority.

(E) If a contaminant listed in subsection (3)(b) of this rule is detected at a concentration greater than the maximum contaminant level, then the water supplier must monitor quarterly. After a minimum of four consecutive quarterly samples, if results are reliably and consistently below the MCL and in compliance with paragraph (3)(b)(H) of this rule, then the water supplier may monitor annually. Annual samples must be collected during the quarter which previously yielded the highest analytical result.

(F) The Authority may require confirmation samples for positive or negative results. If a confirmation sample is required by the Authority, the result must be averaged with the original sample result and the average used to determine compliance.

(G) The Authority may allow compositing of samples to reduce the number of samples to be analyzed by the system. Composite samples from a maximum of five sampling points are allowed, provided that the detection limit of the method used for analysis is less than one-fifth of the MCL. Compositing of samples must be conducted in the laboratory and samples must be analyzed within 14 days of sample collections. If the concentration in the composite sample is 0.0005 mg/l or greater for any contaminant listed in subsection (3)(b) of this

rule, then a follow-up sample must be collected and analyzed within 14 days at each sampling point included in the composite, and be analyzed for that contaminant. Duplicates collected for the original composite samples may be used instead of resampling provided the duplicates are analyzed and the results reported to the Authority within 14 days of collection. For water systems serving a population greater than 3,300 people, the Authority may allow compositing at sampling points only within a single water system. For water systems serving population of 3,300 people or less, the Authority may allow compositing among different water systems provided the 5-sample limit is maintained.

(H) Compliance with contaminants listed in OAR 333-061-0030(2)(c) shall be determined based on the analytical results obtained at each sampling point. If one sampling point is in violation of an MCL, the water system is in violation of the MCL. For systems which monitor more than once per year, compliance with the MCL is determined by a running annual average at each sampling point. At systems where annual or less frequent monitoring takes place, if sample results exceed the MCL, monitoring must be increased to quarterly. The system will not be considered in violation of the MCL until it has completed one year of quarterly sampling. If any single sample result will cause the running annual average to exceed the MCL at any sampling point, the system is out of compliance with the MCL immediately. If a system fails to collect the required number of samples, compliance will be based on the total number of samples collected. If a sample result is less than the detection limit, zero will be used to calculate the annual average. If the water system is out of compliance, the system shall follow the reporting and public notification procedures as prescribed in 333-061-0040 and 333-061-0042(2)(b)(A).

(I) The running annual average (RAA) for a contaminant is calculated by averaging the analytical results for the current monitoring period and the previous monitoring periods within a one-year time frame. For water systems monitoring less frequently than quarterly, the first sample result that exceeds the detection limit or MCL is considered to be the initial sampling result for determination of the RAA. Multiple sample results within any monitoring period will be averaged and then rounded to the same number of significant figures as the MCL for the contaminant in question. For the purposes of calculating a RAA, a monitoring period may be a calendar month or calendar quarter. Special samples, as described by paragraph (1)(h)(C) of this rule, will

not be included in the calculation of the running annual average at a water system.

(J) All new water systems or systems that use a new source of water must demonstrate compliance with the MCL within a period of time specified by the Authority. The system must also comply with the initial sampling frequencies specified by the Authority to ensure a system can demonstrate compliance with the MCL.

(4) Disinfectant Residuals, Disinfection Byproducts, and Disinfection Byproduct Precursors

(a) General sampling and analytical requirements. The requirements of this section apply to all community and non-transient non-community water systems that add a disinfectant (oxidant) to the water supply at any point in the treatment process or deliver water in which a disinfectant (oxidant) has been added to the water supply except that compliance with paragraph (4)(i)(B) is required at transient non-community water systems where chlorine dioxide is used as a disinfectant or oxidant.

(A) Water systems must take all samples during normal operating conditions.

(B) Failure to monitor in accordance with the monitoring plan as specified in paragraph (4)(c)(B) of this rule is a monitoring violation.

(C) Failure to monitor will be treated as a violation for the entire period covered by the annual average where compliance is based on a running annual average (RAA) of monthly or quarterly samples or averages and the system's failure to monitor makes it impossible to determine compliance with MCLs or MRDLs.

(D) Systems must use only data collected under the provisions of this rule to qualify for reduced monitoring.

(E) All samples collected and analyzed under the provisions of section (4) of this rule must be included in determining compliance, even if that number is greater than the minimum required.

(b) Initial Distribution System Evaluation (IDSE) Requirements. This subsection establishes monitoring and other requirements for identifying monitoring locations which, in conjunction with the requirements of subsections (4)(c) and (4)(d) of this rule, determine compliance with the MCLs for TTHM and HAA5 as specified in OAR 333-061-0030. Non-transient non-community water systems serving less than 10,000 people are exempt from the requirements of this subsection.

(A) Water suppliers that begin adding a disinfectant to a water system must complete an IDSE by conducting either standard monitoring or a system specific study. Water suppliers must consult with the Authority after completing the IDSE to identify compliance monitoring locations prior to developing a monitoring plan as

prescribed in paragraph (4)(c)(B) of this rule that includes monitoring locations identified through the IDSE process. Samples collected to conduct an IDSE will not be used for the purpose of determining compliance with MCLs as prescribed by OAR 333-061-0030(2)(b).

(B) Standard monitoring

(i) Standard monitoring plans must include the elements specified in subparagraphs (4)(b)(B)(i)(I) through (III) of this rule:

(I) A schematic of the distribution system (including distribution system water sources, entry points, and storage facilities), with notes indicating the locations and dates of all projected standard monitoring;

(II) An explanation of standard monitoring location selection, and a summary of data relied on to justify the selection; and

(III) The population served and source water classification for the water system.

(ii) Water systems must monitor as indicated in Table 16 below. Water systems must collect dual sample sets at each monitoring location, and at least one round of monitoring must be during the peak historical month for TTHM or HAA5 levels, or during the month of warmest water temperature. Water systems must review available compliance, study, or operational data to determine the peak historical month for TTHM or HAA5 levels or the month of warmest water temperature.

Table 16

Source water type	Population and category	Monitoring periods and frequency of sampling	Distribution system monitoring locations				
			Total per monitoring period	Near entry points	Average residence time	High TTHM locations	High HAA5 locations
Surface water or GWUDI:	< 500 purchasing water systems	One (during peak historical month)[1]	2	1		1	
	< 500 non-purchasing water systems	One (during peak historical month)[1]	2			1	1
	500-3,300 purchasing water systems	four (every 90 days)	2	1		1	
	500-3,300 non-purchasing water systems	four (every 90 days)	2			1	1
	3,301-9,999	four (every 90 days)	4		1	2	1

	10,000-49,999	six (every 60 days)	8	1	2	3	2
	50,000-249,999	six (every 60 days)	16	3	4	5	4
	250,000-999,999	six (every 60 days)	24	4	6	8	6
	1,000,000-4,999,999	six (every 60 days)	32	6	8	10	8
	≥5,000,000	six (every 60 days)	40	8	10	12	10
Ground-water:	< 500 purchasing water systems	one (during peak historical month)[1]	2	1		1	
	< 500 non-purchasing water systems	one (during peak historical month)[1]	2			1	1
	500-9,999	four (every 90 days)	2			1	1
	10,000-99,999	four (every 90 days)	6	1	1	2	2
	100,000-499,999	four (every 90 days)	8	1	1	3	3
	≥500,000	four (every 90 days)	12	2	2	4	4

[1] Peak historical month refers to the month with the highest TTHM or HAA5 levels, or the month of warmest water temperature.

(iii) Samples must be collected at locations spread throughout the distribution system.

(iv) If the number of entry points to the distribution system is fewer than the number of entry point monitoring locations specified in Table 16, excess entry point samples must be replaced equally by samples collected at locations where you would expect to find high TTHM and HAA5 concentration. If there is an odd number of excess sampling locations, the additional sample must be collected at a location where you would expect to find high TTHM concentration. If the number of entry points to the distribution system is greater than the number of entry point monitoring locations specified in Table 16, the samples must be collected at entry points having the highest annual water flows.

(v) Monitoring in accordance with Table 16 may not be reduced according to the provisions of subsection (1)(d) of this rule.

(vi) IDSE report. Water suppliers must submit an IDSE report to the Authority within 90 days of completing standard monitoring that includes the following elements:

(I) All TTHM and HAA5 analytical results collected in accordance with this rule, and all standard monitoring analytical results collected during the period of the IDSE as individual analytical results and a locational running annual average (LRAA) presented in a format acceptable to the Authority. If changed from the standard monitoring plan prescribed by subparagraph (4)(b)(B)(i) of this rule, the report must also include a schematic of the distribution system, the population served, and the source water type.

(II) An explanation of any deviations from the approved standard monitoring plan.

(III) Recommended times and locations for the compliance monitoring required by subsections (4)(c) and (4)(d) of this rule, based on the protocol prescribed by subparagraph (4)(b)(D)(iii) of this rule, including an explanation for why the locations were selected.

(C) System Specific Study. A system specific study must be based on modeling as prescribed by subparagraph (4)(b)(C)(i) of this rule.

(i) Modeling. Water systems may conduct analysis of an extended period simulation hydraulic model. The hydraulic model and analysis must meet the following criteria:

(I) The model must simulate a 24-hour variation in demand and show a consistently repeating 24-hour pattern of residence time;

(II) The model must represent the following criteria: (1) 75 percent of pipe volume; (2) 50 percent of pipe length; (3) all pressure zones; (4) all 12-inch diameter and larger pipes; (5) all 8-inch and larger pipes that connect pressure zones, influence zones from different sources, storage facilities, major demand areas, pumps, and control valves, or are known or expected to be significant conveyors of water; (6) all 6-inch and larger pipes that connect remote areas of a distribution system to the main portion of the system; (7) all storage facilities with standard operations represented in the model; and (8) all active pump stations with controls represented in the model; and (9) all active control valves; and

(III) The model must be calibrated, or have calibration plans for the current configuration of the distribution system during the period of highest TTHM formation potential. All storage facilities must be evaluated as part of the

calibration process. Calibration must be completed no later than 12-months after submission of the system specific study plan.

(IV) Reporting modeling. The system specific study plan must include: (1) tabular or spreadsheet data demonstrating that the model meets requirements in subparagraph (C)(i)(II) of this section; (2) a description of all calibration activities undertaken, and if calibration is complete, a graph of predicted tank levels versus measured tank levels for the storage facility with the highest residence time in each pressure zone, and a time series graph of the residence time at the longest residence time storage facility in the distribution system showing the predictions for the entire simulation period (that is, from time zero until the time it takes to for the model to reach a consistently repeating pattern of residence time); (3) model output showing preliminary 24 hour average residence time predictions throughout the distribution system; (4) timing and number of samples representative of the distribution system planned for at least one monitoring period of TTHM and HAA5 dual sample monitoring at a number of locations no less than would be required for the system under standard monitoring in paragraph (4)(b)(B) of this rule during the historical month of high TTHM; (5) description of how all requirements will be completed no later than 12 months after system submits the system specific study plan; (6) schematic of the distribution system (including distribution system entry points and their sources, and storage facilities), with notes indicating the locations and dates of all completed system specific study monitoring (if calibration is complete) and all compliance monitoring conducted in accordance with this rule; and (7) population served and system type (surface water, groundwater under the direct influence of surface water, or groundwater).

(V) If a model is submitted that does not meet the requirements of subparagraph (4)(b)(C)(i) of this rule, the system must correct the deficiencies and respond to Authority inquiries concerning the model. Failure to correct deficiencies or respond to inquiries by the Authority will result in the system having to conduct

standard monitoring as prescribed by paragraph (4)(b)(B) of this rule.

(ii) IDSE report. Water suppliers must submit the IDSE report to the Authority within 90 days of completing the system specific study, and the report must include the following elements:

(I) The IDSE report must include all system specific study monitoring results collected during the period of the system specific study submitted in a tabular or spreadsheet format acceptable to the Authority. If changed from the system specific study plan submitted under paragraph (4)(b)(C) of this rule, the IDSE report must also include a schematic of the distribution system, the population served, and source water classification;

(II) If using the modeling provision prescribed by subparagraph (4)(b)(C)(i) of this rule, the water supplier must include final information for the elements described in subparagraphs (4)(b)(C)(i)(IV) and (V) of this rule, and a 24-hour time series graph of residence time for each location selected for monitoring in accordance with subsections (4)(c) and (4)(d) of this rule;

(III) The water supplier must recommend monitoring locations selected for monitoring in accordance with subsections (4)(c) and (4)(d) of this rule based on the protocol in paragraph (4)(b)(D) of this rule. It must also recommend and justify the timing of the monitoring to be conducted at these monitoring locations.

(IV) The IDSE report must include an explanation of any deviations from the approved system specific study plan.

(V) The IDSE report must include the analytical and modeling results, and the justification for recommending the monitoring locations selected for monitoring in accordance with subsections (4)(c) and (4)(d) of this rule.

(D) Monitoring location recommendations.

(i) The IDSE report must include recommendations and explanation for where and during what month(s) TTHM and HAA5 monitoring in accordance with subsections (4)(c) and (4)(d) of this rule should be conducted. Recommendations must be based on the criteria in subparagraphs (4)(b)(D)(ii) through (v) of this rule.

(ii) Water suppliers must collect samples as prescribed by Table 17 below. The number of samples and recommended locations must be used for monitoring in accordance with subsections

(4)(c) and (4)(d) of this rule, unless the Authority requires different or additional locations. Monitoring locations should be dispersed throughout the distribution system to the maximum extent possible.

Table 17

Source water type	Population	Monitoring frequency [1]	Distribution system monitoring location		
			Total per monitoring period [2]	Highest TTHM locations	Highest HAA5 locations
Surface water systems or GWUDI	< 500	per year	2	1	1
	500-3,300	per quarter	2	1	1
	3,301-9,999	per quarter	2	1	1
	10,000-49,999	per quarter	4	2	1
	50,000-249,999	per quarter	8	3	3
	250,000-999,999	per quarter	12	5	4
	1,000,000-4,999,999	per quarter	16	6	6
	≥5,000,000	per quarter	20	8	7
Groundwater	< 500	per year	2	1	1
	500-9,999	per year	2	1	1
	10,000-99,999	per quarter	4	2	1
	100,000-499,999	per quarter	6	3	2
	≥500,000	per quarter	8	3	3

[1] All water systems must monitor during month of highest DBP concentrations.

[2] Water systems on quarterly monitoring must collect dual sample sets every 90 days at each monitoring location, except for surface water or groundwater under the direct influence of surface water systems serving 500-3,300. Groundwater systems serving 500-9,999 on annual monitoring must collect dual sample sets at each monitoring location. All other water systems on annual monitoring, and systems using surface water or groundwater under the direct influence of surface water serving 500-3,300 are required to collect individual TTHM and HAA5 samples at the locations with the highest TTHM and HAA5 concentrations. Systems using surface water or groundwater under the direct influence of surface water serving 500-3,300 may collect one dual sample set per monitoring period if the highest TTHM and HAA5 concentrations occur at the same location. For systems serving fewer than 500 people, only one location with a dual sample set per monitoring period is needed if the highest TTHM and HAA5 concentrations occur at the same location, and month.

(iii) Water suppliers must recommend locations for monitoring in accordance with subsections (4)(c) and (4)(d) of this rule based on standard monitoring results or system specific study results. Water suppliers must comply with the protocol specified in subparagraphs (4)(b)(D)(iii)(I) through (VI) of this rule. If a water system is required to monitor at more than six locations,

the protocol must be repeated as necessary. Water systems must select the:

(I) Location with the highest TTHM LRAA not previously selected through this protocol;

(II) Location with the highest HAA5 LRAA not previously selected through this protocol;

(III) Location with the highest TTHM LRAA not previously selected through this protocol;

(IV) Location with the highest TTHM LRAA not previously selected through this protocol;

(V) Location with the highest HAA5 LRAA not previously selected through this protocol; and

(VI) Location with the highest HAA5 LRAA not previously selected through this protocol.

(iv) A water supplier may recommend locations other than those determined through subparagraph (4)(b)(D)(iii) of this rule, if the system includes a rationale for selecting other locations. If the Authority approves the alternate locations, the water system must monitor at these locations to determine compliance with subsections (4)(c) and (4)(d) of this rule.

(v) The water system's recommended monitoring schedule must include the month of historically highest TTHM and HAA5 concentration, unless the Authority approves another month. Once the highest historical month has been identified, and if quarterly or more frequent routine monitoring is required, water systems must schedule monitoring at a regular frequency of at least every 90 days.

(c) Monitoring requirements for TTHM and HAA5:

(A) Routine Monitoring Frequency. At water systems for which an IDSE report was submitted, samples must be collected at the locations and during the months recommended in the IDSE report as prescribed by paragraph (4)(b)(D) of this rule, unless the Authority requires other or additional locations after its review. At non-transient non-community water systems serving less than 10,000 people and for water systems granted a waiver by the EPA exempting the water supplier from completing an IDSE, samples must be collected at the location(s) and dates identified in the monitoring plan developed as prescribed in paragraph (4)(c)(B) of this rule. Samples must be collected at no fewer than the number of locations identified in Table 18:

Table 18

Source water type	Population size category	Monitoring Frequency [1]	Distribution system monitoring location total per monitoring period [2]
Surface water systems or GWUDI:	< 500	per year	2
	500-3,300	per quarter	2
	3,301-9,999	per quarter	2
	10,000-49,999	per quarter	4
	50,000-249,999	per quarter	8
	250,000-999,999	per quarter	12
	1,000,000-4,999,999	per quarter	16
	≥5,000,000	per quarter	20
Groundwater:	< 500	per year	2
	500-9,999	per year	2
	10,000-99,999	per quarter	4
	100,000-499,999	per quarter	6
	≥500,000	per quarter	8

[1] All systems must monitor during month of highest DBP concentrations.

[2] Water systems on quarterly monitoring must collect dual sample sets every 90 days at each monitoring location, except for surface water or groundwater under the direct influence of surface water systems serving 500-3,300. Groundwater systems serving 500-9,999 on annual monitoring must collect dual sample sets at each monitoring location. All other water systems on annual monitoring, and systems using surface water or groundwater under the direct influence of surface water serving 500-3,300 are required to collect individual TTHM and HAA5 samples at the locations with the highest TTHM and HAA5 concentrations. Systems using surface water or groundwater under the direct influence of surface water serving 500-3,300 may collect one dual sample set per monitoring period if the highest TTHM and HAA5 concentrations occur at the same location. For systems serving fewer than 500 people, only one location with a dual sample set per monitoring period is needed if the highest TTHM and HAA5 concentrations occur at the same location, and month.

(B) A monitoring plan must be developed for every water system where monitoring is required according to this subsection, and must be maintained and made available for inspection by the Authority and the general public.

(i) The monitoring plan must include the following elements:

(I) Monitoring locations;

(II) Monitoring dates; and

(III) Compliance calculation procedures.

(ii) For water systems where an IDSE report was not required as prescribed in paragraphs (4)(b)(B) or (4)(b)(C) of this rule the monitoring plan must identify the required number of monitoring locations for monitoring in accordance with subsections (4)(c) and (4)(d) of this rule. Water suppliers must identify the locations by alternating the selection of locations representing high TTHM levels and high HAA5 levels until the required number of monitoring locations have been identified.

Water suppliers must also provide a rationale for identifying the locations as having high levels of TTHM or HAA5.

(iii) For water systems using surface water or GWUDI sources serving more than 3,300 people, a copy of the monitoring plan must be submitted to the Authority prior to the date the water supplier conducts initial monitoring according to this subsection, unless the IDSE report submitted as prescribed in subsection (4)(b) of this rule contains all the information required in paragraph (4)(c)(B) of this rule.

(iv) Revisions to monitoring plans. Water suppliers may revise monitoring plans to reflect changes in treatment, distribution system operations, layout (including new service areas), or other factors that may affect TTHM or HAA5 formation, including Authority-approved reasons, after consultation with the Authority regarding the need and justification for the revision. If monitoring locations are changed, then water systems must replace existing monitoring locations with the lowest LRAA with new locations that reflect current distribution system locations expected to have high TTHM or HAA5 levels. The Authority may require modifications in monitoring plans. Surface water or groundwater under the direct influence of surface water systems serving > 3,300 people must submit a copy of their modified monitoring plan to the Authority prior to the date required to comply with the revised monitoring plan.

(C) A water system monitoring for TTHM or HAA5 in accordance with subsections (4)(c), (4)(d) or (4)(e) of this rule is in violation of the MCL specified in OAR 333-061-0030(2)(b) when the LRAA calculation at any monitoring location exceeds the MCL based on four consecutive quarters of monitoring (or fewer than four quarters of monitoring if the MCL would be exceeded regardless of monitoring results in subsequent quarters). A water system is in violation of the monitoring requirements every quarter that a monitoring result would be used in calculating an LRAA if the system fails to monitor.

(D) Compliance calculations and determinations. For water systems where quarterly monitoring is required, water suppliers must make compliance calculations at the end of every calendar quarter beginning with the fourth quarter of the initial monitoring period. The LRAA must be calculated prior to the fourth quarter if fewer than four quarters of data would cause the MCL to be exceeded, regardless of the monitoring results in subsequent quarters. Water suppliers

required to conduct monitoring at a frequency less than quarterly must make compliance calculations every time samples are collected.

(i) Water suppliers must calculate the LRAA for TTHM and HAA5 to determine that each LRAA does not exceed the MCL listed in OAR 333-061-0030(2)(b) for water systems where quarterly monitoring is required. Water suppliers that fail to complete four consecutive quarters of monitoring must calculate the LRAA based on the available data from the most recent four quarters. Water suppliers that collect more than one sample per quarter at a specific monitoring location must average all samples collected in the quarter for that location to determine a quarterly average to be used in the LRAA calculation.

(ii) For water systems where monitoring is yearly or less frequent, water suppliers must determine that each sample collected is less than the MCL listed in OAR 333-061-0030(2)(b). If any sample exceeds the MCL, the water system must comply with the requirements of subsection (4)(e) of this rule. If no sample exceeds the MCL, the sample result for each monitoring location is considered the LRAA for that monitoring location.

(iii) A water supplier required to conduct quarterly monitoring at a water system is in violation of the monitoring requirements for each quarter that a monitoring result would be used in calculating an LRAA if monitor is not conducted.

(d) Reduced monitoring. Water suppliers may reduce monitoring to the frequency specified in Table 19 any time the LRAA is ≤0.040 mg/L for TTHM and ≤0.030 mg/L for HAA5 at all monitoring locations.

Table 19

Source water type	Population size category	Monitoring frequency [1]	Distribution system monitoring location per monitoring period
Surface water or GWUDI:	< 500		Monitoring may not be reduced.
	500-3,300	per year	One TTHM sample at the location and during the quarter with the highest TTHM single measurement, and one HAA5 sample at the location and during the quarter with the highest HAA5 single measurement; or one dual sample set per year if the highest TTHM and HAA5 measurements occurred at the same location and during the same quarter.
	3,301-9,999	per year	2 dual sample sets, one at the location and during the quarter with the highest TTHM single measurement, one at the location and during the

			quarter with the highest HAA5 single measurement.
	10,000-49,999	per quarter	2 dual sample sets, one each at the locations with the highest TTHM and highest HAA5 LRAAs.
	50,000-249,999	per quarter	4 dual sample sets at the locations with the two highest TTHM and two highest HAA5 LRAAs.
	250,000-999,999	per quarter	6 dual sample sets at the locations with the three highest TTHM and three highest HAA5 LRAAs.
	1,000,000-4,999,999	per quarter	8 dual sample sets at the locations with the four highest TTHM and four highest HAA5 LRAAs.
	≥5,000,000	per quarter	10 dual sample sets—at the locations with the five highest TTHM and five highest HAA5 LRAAs.
Groundwater:	< 500	every third year	One TTHM sample at the location and during the quarter with the highest TTHM single measurement, and one HAA5 sample at the location and during the quarter with the highest HAA5 single measurement; or one dual sample set per year if the highest TTHM and HAA5 measurements occurred at the same location and during the same quarter.
	500-9,999	per year	One TTHM sample at the location and during the quarter with the highest TTHM single measurement, and one HAA5 sample at the location and during the quarter with the highest HAA5 single measurement; or one dual sample set per year if the highest TTHM and HAA5 measurements occurred at the same location and during the same quarter.
	10,000-99,999	per year	2 dual sample sets: one at the location and during the quarter with the highest TTHM single measurement, one at the location and during the quarter with the highest HAA5 single measurement.
	100,000-499,999	per quarter	2 dual sample sets; at the locations with the highest TTHM and highest HAA5 LRAAs.
	≥500,000	per quarter	4 dual sample sets at the locations with the two highest TTHM and two highest HAA5 LRAAs.

[1] Systems on quarterly monitoring must take dual sample sets every 90 days.

(A) Water suppliers may only use data collected under the provisions of subsections (4)(c) and (4)(d) of this rule to qualify for reduced monitoring. In addition, the annual source water average TOC level, before any treatment, must be less than or equal to 4.0 mg/L at each plant treating surface water or groundwater under the direct influence of surface water, based on monitoring conducted as prescribed in paragraph (4)(d)(D) and subsection (4)(k) of this rule.

(B) Water suppliers may remain on reduced monitoring so long as:

(i) The LRAA for water systems conducting quarterly monitoring is less than or equal to 0.040 mg/L for TTHM and less than or equal to 0.030 mg/L for HAA5 at each monitoring location; or

(ii) Samples collected by water systems conducting annual or less frequent monitoring are less than or equal to 0.060 mg/L for TTHM and less than or equal to 0.045 mg/L for HAA5.

(C) Water suppliers must resume routine monitoring as prescribed in subsection (4)(c) of this rule, or begin increased monitoring as prescribed in subsection (4)(e) of this rule if:

(i) The LRAA based on quarterly monitoring exceeds 0.040 mg/L for TTHM or 0.030 mg/L for HAA5 at any monitoring location; or

(ii) A sample collected at any location exceeds either 0.060 mg/L for TTHM or 0.045 mg/L for HAA5 when the monitoring frequency is annual or less frequent; or

(iii) The average annual source water TOC level, before any treatment, is greater than 4.0 mg/L at any treatment plant treating surface water or groundwater under the direct influence of surface water.

(D) Monitoring requirements for source water TOC. For water systems using surface water or GWUDI sources, TOC samples must be collected every 30 days at a location prior to any treatment in order to qualify for reduced TTHM and HAA5 monitoring as prescribed by this subsection, unless the water system is monitoring as prescribed by subsection (4)(k) of this rule. To remain on reduced monitoring, and in addition to meeting other criteria for reduced monitoring, the source water TOC running annual average must be ≤4.0 mg/L, based on the most recent four quarters of monitoring, on a continuing basis at a location prior to any treatment. Once qualified for reduced monitoring as prescribed by this subsection, a water system may reduce source water TOC monitoring to quarterly TOC samples collected every 90 days at a location prior to any treatment.

(E) A water system may be returned to routine monitoring at the Authority's discretion.

(e) Increased Monitoring

(A) At water systems where annual or less frequent monitoring is required according to subsections (4)(c) or (4)(d) of this rule, monitoring must be increased to dual sample sets collected every 90 days at all locations if a TTHM or HAA5 sample exceeds the MCL at any location.

(B) At water systems where increased monitoring is conducted according to paragraph (4)(e)(A) of this rule, samples must be collected at the monitoring locations specified in the monitoring plan developed according to paragraph (4)(c)(B) of this rule.

(C) Monitoring may be returned to routine if at least four consecutive quarters of increased monitoring has been conducted and the LRAA for every monitoring location is less than or equal to 0.060 mg/L for TTHM and 0.045 mg/L for HAA5.

(f) Operational Evaluation Levels:

(A) The Operational evaluation level for TTHM or HAA5 has been exceeded at a monitoring location when the sum of the two previous quarters' sample results plus twice the current quarter's sample result, divided by 4, exceeds the MCL.

(B) Operational evaluation and report.

(i) Systems that exceed the operational evaluation level for either TTHM or HAA5 must conduct an operational evaluation and submit a written report of the evaluation to the Authority no later than 90 days after being notified of the analytical result that causes the system to exceed the operational evaluation level. The written report must be made available to the public upon request.

(ii) Operational evaluations must include an examination of the water system’s treatment and distribution practices, including but not limited to: storage tank operations, excess storage capacity, distribution system flushing, changes in sources or source water quality, and treatment changes or problems that may contribute to TTHM and HAA5 formation. The examination must also include what steps could be considered to minimize future exceedances.

(I) The Authority may allow water systems to limit the scope of the evaluation if the water system is able to identify the cause of the operational evaluation level exceedance.

(II) The request to limit the scope of the evaluation does not extend the schedule specified in subparagraph (4)(f)(B)(i) of this rule for submitting the written report. The Authority must approve this limited scope of evaluation in writing, and the water system must keep that approval with the completed report.

(g) Chlorite monitoring and compliance for community and non-transient non-community water systems where chlorine dioxide is used for disinfection or oxidation.

(A) Routine monitoring.

(i) Daily monitoring. Samples must be collected every day at the entrance to the distribution system. For any daily sample that exceeds the chlorite MCL, the water supplier must collect additional samples in the distribution system the following day at the locations required by paragraph (4)(g)(B) of this rule, in addition to the sample required at the entrance to the distribution system.

(ii) Monthly monitoring. A three sample set must be collected every month in the distribution system. The water supplier must collect one sample at each of the following locations: near the first customer, at a location representative of average residence time, and at a location reflecting maximum residence time in the distribution system. Any additional routine sampling must be conducted in the same manner (as three sample sets, at the specified locations). The water supplier may use the results of additional monitoring conducted under paragraph (4)(g)(B) of this rule to meet the requirement for monitoring in this paragraph.

(B) Additional monitoring. On each day following a routine sample monitoring result that exceeds the chlorite MCL at the entrance to the distribution system, the water supplier is required to collect three chlorite distribution system samples at the following locations: as close to the first customer as possible, in a location representative of average residence time, and as close to the end of the distribution system as possible (reflecting maximum residence time in the distribution system).

(C) Reduced monitoring.

(i) Chlorite monitoring at the entrance to the distribution system required by subparagraph (4)(g)(A)(i) of this rule may not be reduced.

(ii) Chlorite monitoring in the distribution system required by subparagraph (4)(g)(A)(ii) of this rule may be reduced to one three sample set per quarter after one year of monitoring where no individual chlorite sample taken in the distribution system under subparagraph (4)(g)(A)(ii) of this rule has exceeded the chlorite MCL and the system has not been required to conduct monitoring under paragraph (4)(g)(B) of this rule. The system may remain on the reduced monitoring schedule until either any of the three individual chlorite samples taken quarterly in the distribution system under subparagraph (4)(g)(A)(ii) of this rule exceeds the chlorite MCL or the system is required to conduct

monitoring under paragraph (4)(g)(B) of this rule, at which time the system must revert to routine monitoring.

(D) Compliance must be based on an arithmetic average of each three sample set taken in the distribution system as required by subparagraph (4)(g)(A)(ii) of this rule and paragraph (4)(g)(B) of this rule. If the arithmetic average of any three sample set exceeds the MCL, the water system is in violation of the MCL and must notify the public as required by OAR 333-061-0042(2)(b)(A), in addition to reporting to the Authority as required by OAR 333-061-0040.

(h) Bromate monitoring and compliance for water systems where ozone is used for disinfection or oxidation.

(A) Routine monitoring. One sample must be collected every month for each treatment plant in the water system using ozone. Water suppliers must collect samples monthly at the entrance to the distribution system while the ozonation system is operating under normal conditions.

(B) Reduced monitoring. Bromate monitoring may be reduced from monthly to quarterly if the bromate concentration is less than or equal to 0.0025 mg/L as a running annual average based on monthly bromate measurements for the most recent four quarters. Water suppliers may continue reduced monitoring as long as the running annual average of quarterly bromate samples is less than or equal to 0.0025 mg/L. If the running annual average bromate concentration is >0.0025 mg/L, the water supplier must resume routine monitoring as required by paragraph (4)(h)(A) of this rule.

(C) Compliance must be based on a running annual arithmetic average, computed quarterly, of monthly samples (or, for months in which the system takes more than one sample, the average of all samples collected during the month) collected by the water supplier as required by this subsection. If the average of samples covering any consecutive four quarter period exceeds the MCL, the water system is in violation of the MCL and must notify the public as required by OAR 333-061-0042(2)(b)(A), in addition to reporting to the Authority as required by OAR 333-061-0040. If a water supplier fails to complete 12 consecutive months monitoring, compliance with the MCL for the last four quarter compliance period must be based on an average of the available data.

(i) Monitoring and compliance requirements for disinfectant residuals

(A) Chlorine and chloramines

(i) Routine monitoring. At water systems where chlorine or chloramines are used, water suppliers must measure the residual disinfectant level at the same points in the distribution system

and at the same time when total coliforms are sampled as specified in OAR 333-061-0036(6). At water systems where surface water or GWUDI sources are used, results of residual disinfectant concentration sampling conducted as required by OAR 333-061-0036(5)(a)(F) for unfiltered systems or OAR 333-061-0036(5)(b)(E) for systems which filter, may be used in lieu of collecting separate samples. Compliance with this rule is achieved when the running annual average of monthly averages of samples collected in the distribution system, computed quarterly, is less than or equal to the MRDL. Operators may increase residual disinfectant levels of chlorine or chloramine (but not chlorine dioxide) in the distribution system to a level and for a time necessary to protect public health in order to address specific microbiological contaminant problems resulting from events in the source water or in the distribution system.

(ii) Reduced monitoring from subparagraph (4)(i)(A)(i) of this rule is not allowed.

(iii) Compliance requirements for chlorine and chloramines.

(I) Compliance must be based on a running annual arithmetic average, computed quarterly, of monthly averages of all samples collected by the water supplier as required by paragraph (4)(i)(A) of this rule. If the average covering any consecutive four quarter period exceeds the MRDL, the MRDL is exceeded and the water supplier must notify the public as required by OAR 333-061-0042(2)(b)(A), in addition to reporting to the Authority as required by OAR 333-061-0040.

(II) In cases where water suppliers switch between the use of chlorine and chloramines for residual disinfection at a water system during the year, compliance must be determined by including together all monitoring results of both chlorine and chloramines in calculating compliance. Reports submitted as required by OAR 333-061-0040(1) must clearly indicate which residual disinfectant was analyzed for each sample.

(B) Chlorine dioxide

(i) Routine monitoring. At water systems where chlorine dioxide is used for disinfection or oxidation, water suppliers must collect daily samples at the entrance to the distribution system. For any daily sample that exceeds the MRDL, the water supplier must collect samples in the distribution system the following day at

the locations required by subparagraph (4)(i)(B)(ii) of this rule, in addition to the sample required at the entrance to the distribution system. Compliance with this rule is achieved when daily samples are taken at the entrance to the distribution system and no two consecutive daily samples exceed the MRDL.

(ii) Additional monitoring. On each day following a routine sample monitoring result that exceeds the MRDL, the water supplier is required to collect three chlorine dioxide distribution system samples. If chlorine dioxide or chloramines are used to maintain a disinfectant residual in the distribution system, or if chlorine is used to maintain a disinfectant residual in the distribution system and there are no disinfection addition points after the entrance to the distribution system (that is, no booster chlorination), the water supplier must collect three samples as close to the first customer as possible, at intervals of at least six hours. If chlorine is used to maintain a disinfectant residual in the distribution system and there are one or more disinfection addition points after the entrance to the distribution system (that is, booster chlorination), the water supplier must collect one sample at each of the following locations: as close to the first customer as possible, in a location representative of average residence time, and as close to the end of the distribution system as possible (reflecting maximum residence time in the distribution system).

(iii) Chlorine dioxide monitoring may not be reduced from subparagraph (4)(i)(B)(ii) of this rule.

(iv) Compliance requirements for chlorine dioxide

(I) Acute violations. Compliance must be based on consecutive daily samples collected by the water system as required by paragraph (4)(i)(B) of this rule. If any daily sample taken at the entrance to the distribution system exceeds the MRDL, and on the following day one (or more) of the three samples taken in the distribution system exceed the MRDL, the water system is in violation of the MRDL and must take immediate corrective action to lower the level of chlorine dioxide below the MRDL and must notify the public pursuant to the procedures for acute health risks as required by OAR 333-061-0042(2)(a)(C) in addition to reporting to the Authority as required by OAR 333-061-0040. Failure to take samples in the distribution system the day

following an exceedance of the chlorine dioxide MRDL at the entrance to the distribution system will also be considered an MRDL violation and the water system must notify the public of the violation in accordance with the provisions for acute violations as required by OAR 333-061-0042(2)(a)(C) in addition to reporting to the Authority as required by OAR 333-061-0040.

(II) Non-acute violations. Compliance must be based on consecutive daily samples collected by the system as required by paragraph (4)(i)(B) of this rule. If any two consecutive daily samples taken at the entrance to the distribution system exceed the MRDL and all distribution system samples taken are below the MRDL, the water system is in violation of the MRDL and must take corrective action to lower the level of chlorine dioxide below the MRDL at the point of sampling and will notify the public pursuant to the procedures for non-acute health risks specified by OAR 333-061-0042(2)(b)(A), in addition to reporting to the Authority as required by OAR 333-061-0040. Failure to monitor at the entrance to the distribution system the day following an exceedance of the chlorine dioxide MRDL at the entrance to the distribution system is also an MRDL violation and the water system must notify the public of the violation in accordance with the provisions for non-acute violations specified by OAR 333-061-0042(2)(b)(A) in addition to reporting to the Authority as required by OAR 333-061-0040.

(j) Additional requirements for purchasing water systems. Purchasing water systems that do not add a disinfectant, but deliver water where a disinfectant (oxidant) has been added to the water supply at any point in the treatment process must comply with analytical and monitoring requirements for chlorine and chloramines as prescribed in subsection (4)(i) of this rule.

(k) Monitoring requirements for disinfection byproduct precursors (DBPP)

(A) Routine monitoring. At water systems where surface water or GWUDI sources are used and where conventional filtration treatment is used, monitoring must be conducted at each treatment plant for TOC no later than the point of combined filter effluent turbidity monitoring and representative of the treated water. Monitoring for TOC must be conducted in the source water prior to any treatment at the same time as monitoring for TOC in the treated water. These samples (source water and treated water) are referred to as paired

samples. At the same time as the source water sample is collected, all water suppliers must also measure alkalinity in the source water prior to any treatment. Water suppliers must collect one paired sample and one source water alkalinity sample per month per treatment plant at a time representative of normal operating conditions and influent water quality.

(B) Reduced monitoring. At water systems using surface water or GWUDI sources with an average treated water TOC of less than 2.0 mg/L for two consecutive years, or less than 1.0 mg/L for one year, monitoring may be reduced to one paired sample and one source water alkalinity sample per plant per quarter. The water system must revert to routine monitoring in the month following the quarter when the annual average treated water TOC is greater than or equal to 2.0 mg/L.

(C) Compliance must be determined as specified by OAR 333-061-0032(10)(e). Water suppliers may begin monitoring to determine whether Step 1 TOC removals can be met 12 months prior to the compliance date for the system. This monitoring is not required and failure to monitor during this period is not a violation. However, any water system that does not monitor during this period, and then determines in the first 12 months after the compliance date that it is not able to meet the Step 1 requirements as specified in OAR 333-061-0032(10)(d)(B) and must therefore apply for alternate minimum TOC removal (Step 2) requirements, is not eligible for retroactive approval of alternate minimum TOC removal (Step 2) requirements as allowed by OAR 333-061-0032(10)(d)(C) and is in violation. Water systems may apply for alternate minimum TOC removal (Step 2) requirements any time after the compliance date. For systems required to meet step 1 TOC removals, if the value calculated under OAR 333-061-0032(10)(e)(A)(iv) is less than 1.00, the system is in violation of the treatment technique requirements and must notify the public pursuant to OAR 333-061-0042(2)(b)(A), in addition to reporting to the Authority pursuant to OAR 333-061-0040.

(l) Disinfection Profiling and Disinfection Benchmarking. For any community, non-transient non-community, or transient non-community water system utilizing surface water or GWUDI sources where a significant change to the disinfection treatment process as defined by OAR 333-061-0060(1)(e)(A) through (1)(e)(D) is proposed, the water supplier must conduct disinfection profiling and benchmarking for *Giardia lamblia* and viruses. For any community or non-transient non-community water system where surface water or GWUDI sources are used and where the running annual average

greater than or equal to 0.064 mg/l for TTHM or 0.048 mg/l for HAA5, the water supplier must conduct disinfection profiling for *Giardia lamblia*.

(A) For water systems serving at least 10,000 people, water suppliers must conduct the disinfection profiling in accordance with the USEPA Disinfection Profiling and Benchmarking Guidance Manual. The profile must be based on daily inactivation rate calculations over a period of 12 consecutive months. If chloramines, ozone, or chlorine dioxide is used as a primary disinfectant, the log inactivation for viruses must be calculated and an additional disinfection profile must be developed using a method approved by the Authority.

(B) At water systems serving less than 10,000 people, the disinfection profiling must be conducted in accordance with or the USEPA LT1-ESWTR Disinfection Profiling and Benchmarking Technical Guidance Manual. The profile must be based on weekly inactivation rate calculations collected on the same calendar day over a period of 12 consecutive months. If chloramines, ozone, or chlorine dioxide are used as a primary disinfectant, the log inactivation for viruses must be calculated and an additional disinfection profile must be developed using a method approved by the Authority.

(C) At water systems using either a single or multiple points of disinfection, monitoring must be conducted according to the following parameters to determine total log inactivation for each disinfection segment:

(i) The temperature of the disinfected water at each residual disinfectant concentration sampling point during peak hourly flow;

(ii) The pH of the disinfected water at each residual disinfectant concentration sampling point during peak hourly flow for systems using chlorine;

(iii) The disinfectant contact time(s) ("T") during peak hourly flow; and

(iv) The residual disinfectant concentration(s) ("C") of the water before or at the first customer and prior to each additional point of disinfection during peak hourly flow.

(D) Water suppliers required to develop disinfection profiles as prescribed by OAR 333-061-0060(1)(e) must meet the requirements of subparagraphs (4)(l)(D)(i) through (iii) of this rule:

(i) Water systems must monitor at least weekly for a period of 12 consecutive months to determine the total log inactivation for *Giardia lamblia* and viruses. If water systems monitor more frequently, the monitoring frequency must be evenly spaced.

Water systems that operate for fewer than 12 months per year must monitor weekly during the period of operation;

(ii) Water systems must determine log inactivation for *Giardia lamblia* through the entire plant, based on CT99.9 values in Tables 21 through 28 in OAR 333-061-0036(5) as applicable; and

(iii) Water systems must determine log inactivation for viruses through the entire treatment plant based on a protocol approved by the Authority.

(E) Water suppliers must calculate the total inactivation ratio for *Giardia lamblia* as specified in this paragraph.

(i) Water systems using only one point of disinfectant application must determine the total inactivation ratio for the disinfection segment based on the methods specified in this paragraph.

(I) Water systems must determine one inactivation ratio (CTcalc/CT99.9) before or at the first customer during peak hourly flow; or

(II) Must determine successive (CTcalc/CT99.9) values, representing sequential inactivation ratios, between the point of disinfectant application and a point before or at the first customer during peak hourly flow. Water systems must calculate the total inactivation ratio by determining (CTcalc/CT99.9) for each sequence and then adding the (CTcalc/CT99.9) values together to determine Σ(CTcalc/CT99.9).

(ii) For water systems where there is more than one point of disinfectant application before the first customer, water suppliers must determine the (CTcalc/CT99.9) value of each disinfection segment immediately prior to the next point of disinfectant application, or for the final segment, before or at the first customer, during peak hourly flow. The (CTcalc/CT99.9) value of each segment and Σ(CTcalc/CT99.9) must be calculated using the method in subparagraph (4)(l)(E)(i)(II) of this rule.

(iii) The system must determine the total log of inactivation by multiplying the value calculated in subparagraphs (4)(l)(E)(i) or (ii) of this rule by 3.0.

(F) In lieu of conducting new monitoring as prescribed by paragraph (4)(l)(C) of this rule, water suppliers may elect to meet the requirements of subparagraphs (4)(l)(F)(i) or (ii) of this rule as follows:

(i) For water systems that have at least one year of existing data that are substantially equivalent to data collected in accordance with the provisions of this subsection may use these data to develop disinfection profiles as specified in this section if the water supplier has not made a significant change to treatment practices nor changed sources since the data were collected. Water suppliers may develop disinfection profiles using up to three years of existing data.

(ii) Water suppliers may use disinfection profile(s) developed as prescribed by this subsection in lieu of developing a new profile if the system has neither made a significant change to its treatment practice nor changed sources since the profile was developed. Water systems that have not developed a virus profile as prescribed by paragraph (4)(l)(G) of this rule must develop a virus profile using the same monitoring data on which the *Giardia lamblia* profile is based.

(G) Water suppliers must calculate the log of inactivation for viruses using a similar protocol as described in paragraph (4)(l)(D) of this rule, using a CT99.99 and a multiplication factor of 4.0.

(H) A water system subject to OAR 333-061-0060(1)(e) must calculate a disinfection benchmark using the procedures specified in subparagraphs (4)(l)(H)(i) and (ii) of this rule to calculate a disinfection benchmark.

(i) For each year of profiling data collected and calculated as prescribed by paragraphs (4)(l)(A) through (G) of this rule, systems must determine the lowest mean monthly level of both *Giardia lamblia* and virus inactivation. Water systems must determine the mean *Giardia lamblia* and virus inactivation for each calendar month for each year of profiling data by dividing the sum of daily or weekly *Giardia lamblia* and virus log inactivation by the number of values calculated for that month.

(ii) The disinfection benchmark is the lowest monthly mean value (for water systems with one year of profiling data) or the mean of the lowest monthly mean values (for water systems with more than one year of profiling data) of *Giardia lamblia* and virus log inactivation in each year of profiling data.

(I) Water systems must retain the disinfection profile data in graphic form, such as a spreadsheet, which must be available for review by the Authority as part of a sanitary survey or other field visit contact.

(5) Surface Water Treatment.

(a) A public water system that uses a surface water source or a groundwater source under the direct influence of surface water that does not provide

filtration treatment must monitor water quality as specified in this subsection beginning January 1, 1991 for systems using a surface water source and January 1, 1991 or 6 months after the Authority has identified a source as being under the direct influence of surface water for groundwater sources, whichever is later.

(A) Fecal coliform or total coliform density measurements as required by OAR 333-061-0032(2)(a)(A) must be performed on representative source water samples immediately prior to the first or only point of disinfectant application. The system must sample for fecal or total coliforms at the minimum frequency shown in Table 20 each week the system serves water to the public. These samples must be collected on separate days. Also one fecal or total coliform density measurement must be made every day the system serves water to the public when the turbidity of the source water exceeds 1 NTU (these samples count towards the weekly coliform sampling requirement) unless the Authority determines that the system, for logistical reasons outside of its control, cannot have the sample analyzed within 30 hours of collection.

Table 20	
Population Served:	Samples Per Week:
500 or less	1
501 to 3,300	2
3,301 to 10,000	3
10,001 to 25,000	4
More than 25,000.	5

(B) Turbidity measurements to determine compliance with OAR 333-061-0030(3)(a) must be performed on representative grab samples of source water immediately prior to the first or only point of disinfectant application every four hours (or more frequently) that the system serves water to the public. A public water system may substitute continuous turbidity monitoring for grab sample monitoring if it validates the continuous measurement for accuracy on a regular basis using a protocol approved by the Authority. Systems using continuous turbidity monitoring must report the turbidity data to the Authority in the same manner that grab sample results are reported. The Authority will furnish report forms upon request.

(C) The total inactivation ratio for each day that the system is in operation must be determined based on the CT99.9 values in Tables 21 through 28. The parameters necessary to determine the total inactivation ratio must be monitored as follows:

(i) The temperature of the disinfected water must be measured at least once per day at each residual disinfectant concentration sampling point.

(ii) If the system uses chlorine, the pH of the disinfected water must be measured at least once per day at each chlorine residual disinfectant concentration sampling point.

(iii) The disinfectant contact time(s) ("T") in minutes must be determined for each day during peak hourly flow.

(iv) The residual disinfectant concentration(s) ("C") in mg/l before or at the first customer must be measured each day during peak hourly flow.

(v) If a system uses a disinfectant other than chlorine or UV, the system may demonstrate to the Authority, through the use of protocol approved by the Authority for on-site disinfection challenge studies or other information satisfactory to the Authority, that CT99.9 values other than those specified in the Tables 27 and 28 or other operational parameters are adequate to demonstrate that the system is achieving the minimum inactivation rates required by OAR 333-061-0032(3)(a).

Table 21

CT Values ($CT_{99.9}$) for 99.9 Percent Inactivation of *Giardia Lamblia* Cysts by Free Chlorine at 0.5 ºC(33ºF) or Lower[1])							
Free residual (mg/l)	pH						
	≤6.0	**6.5**	**7.0**	**7.5**	**8.0**	**8.5**	**≤9.0**
≤0.4	137	163	195	237	277	329	390
0.6	141	168	200	239	286	342	407
0.8	145	172	205	246	295	354	422
1.0	148	176	210	253	304	365	437
1.2	152	180	215	259	313	376	451
1.4	155	184	221	266	321	387	464
1.6	157	189	226	273	329	397	477
1.8	162	193	231	279	338	407	489
2.0	165	197	236	286	345	417	500
2.2	169	201	242	297	353	426	511
2.4	172	205	247	298	361	435	522
2.6	175	209	252	304	368	444	533
2.8	178	213	257	310	375	452	543
3.0	181	217	261	316	382	460	552

[1] These CT values achieve greater than a 99.99 percent inactivation of viruses. CT values between the indicated pH values may be determined by linear interpolation. CT values between the indicated temperatures of different tables may be determined by linear interpolation. If no interpolation is used, use the $CT_{99.9}$ values at the lower temperature and at the higher pH.

Table 22

CT Values ($CT_{99.9}$) Percent Inactivation of *Giardia Lamblia* Cysts by Free Chlorine at 5.0 ºC(41ºF)[1]							
Free residual (mg/l)	pH						
	≤6.0	**6.5**	**7.0**	**7.5**	**8.0**	**8.5**	**≤9.0**
≤0.4	97	117	139	166	198	236	279
0.6	100	120	143	171	204	244	291
0.8	103	122	146	175	210	252	301
1.0	105	125	149	179	216	260	312
1.2	107	127	152	183	221	267	320
1.4	109	130	155	187	227	274	329
1.6	111	132	158	192	232	281	337
1.8	114	135	162	196	238	287	345
2.0	116	138	165	200	243	294	353
2.2	118	140	169	204	248	300	361
2.4	120	143	172	209	253	306	368
2.6	122	149	175	213	258	312	375
2.8	124	148	178	217	263	318	382
3.0	126	151	182	221	268	324	389

[1] These CT values achieve greater than a 99.99 percent inactivation of viruses. CT values between the indicated pH values may be determined by linear interpolation. CT values between the indicated temperatures of different tables may be determined by linear interpolation. If no interpolation is used, use the $CT_{99.9}$ value at the lower temperature, and at the higher pH.

Table 23

CT Values ($CT_{99.9}$) for 99.9 Percent Inactivation of *Giardia Lamblia* Cysts by Free Chlorine at 10.0 ºC(50ºF)[1]							
Free residual (mg/l)	pH						
	≤6.0	**6.5**	**7.0**	**7.5**	**8.0**	**8.5**	**≤9.0**
≤0.4	73	88	104	125	149	177	209
0.6	75	90	107	128	153	183	218
0.8	78	92	110	131	158	189	226
1.0	79	94	112	134	162	195	234
1.2	80	95	114	137	166	200	240
1.4	82	98	116	140	170	206	247
1.6	83	99	119	144	174	211	253
1.8	86	101	122	147	179	215	259
2.0	87	104	124	150	182	221	265
2.2	89	105	127	153	186	225	271
2.4	90	107	129	157	190	230	276
2.6	92	110	131	160	194	234	281
2.8	93	111	134	163	197	239	287
3.0	95	113	137	166	201	243	292

[1] These CT values achieve greater than a 99.99 percent inactivation of viruses. CT values between the indicated pH values may be determined by linear interpolation. CT values between the indicated temperatures of different tables may be determined by linear interpolation. If no interpolation is used, use the $CT_{99.9}$ value at the lower temperature, and at the higher pH.

Table 24

CT Values ($CT_{99.9}$) for 99.9 Percent Inactivation of *Giardia Lamblia* Cysts by Free Chlorine at 15.0 ºC(59ºF)[1]							
Free residual (mg/l)	pH						
	≤6.0	**6.5**	**7.0**	**7.5**	**8.0**	**8.5**	**≤9.0**
≤0.4	49	59	70	83	99	118	140
0.6	50	60	72	86	102	122	146
0.8	52	61	73	88	105	126	151
1.0	53	63	75	90	108	130	156
1.2	54	64	76	92	111	134	160
1.4	55	65	78	94	114	137	165
1.6	56	66	79	96	116	141	169
1.8	57	68	81	98	119	144	173
2.0	58	69	83	100	122	147	177
2.2	59	70	85	102	124	150	181
2.4	60	72	86	105	127	153	184
2.6	61	73	88	107	129	156	188
2.8	62	74	89	109	132	159	191
3.0	63	76	91	111	134	162	195

[1] These CT values achieve greater than a 99.99 percent inactivation of viruses. CT values between the indicated pH values may be determined by linear interpolation. CT values between the indicated temperatures of different tables may be determined by linear interpolation. If no interpolation is used, use the $CT_{99.9}$ value at lower temperature, and at the higher pH.

Table 25

CT Values ($CT_{99.9}$) for 99.9 Percent Inactivation of *Giardia Lamblia* Cysts by Free Chlorine at 20 ºC(68ºF)[1]							
Free residual (mg/l)	pH						
	≤6.0	**6.5**	**7.0**	**7.5**	**8.0**	**8.5**	**≤9.0**
≤0.4	36	44	52	62	74	89	105
0.6	38	45	54	64	77	92	109
0.8	39	46	55	66	79	95	113
1.0	39	47	56	67	81	98	117
1.2	40	48	57	69	83	100	120
1.4	41	49	58	70	85	103	123
1.6	42	50	59	72	87	105	126
1.8	43	51	61	74	89	108	129
2.0	44	52	62	75	91	110	132
2.2	44	53	63	77	93	113	135
2.4	45	54	65	78	95	115	138
2.6	46	55	66	80	97	117	141
2.8	47	56	67	81	99	118	143
3.0	47	57	68	83	101	122	146

[1] These CT values achieve greater than a 99.99 percent inactivation of viruses. CT values between the indicated pH values may be determined by linear interpolation. CT values between the indicated temperatures of different tables may be determined by linear interpolation. If no interpolation is used, use the $CT_{99.9}$ value at the lower temperature, and at the higher pH.

Table 26

CT Values ($CT_{99.9}$) for 99.9 Percent Inactivation of *Giardia Lamblia* Cysts by Free Chlorine at 25 ºC(77ºF)[1] and Higher							
Free residual (mg/l)	pH						
	≤6.0	**6.5**	**7.0**	**7.5**	**8.0**	**8.5**	**≤9.0**
≤0.4	24	29	35	48	50	59	70
0.6	25	30	36	43	51	61	73
0.8	26	31	37	44	53	63	75
1.0	26	31	37	45	54	65	78
1.2	27	32	38	46	55	67	80
1.4	27	33	39	47	57	69	82
1.6	28	33	40	48	58	70	84
1.8	29	34	41	49	60	72	86
2.0	29	35	41	50	61	74	88
2.2	30	35	42	51	62	75	90
2.4	30	36	43	52	63	77	92
2.6	31	37	44	53	65	78	94
2.8	31	37	45	54	66	80	96
3.0	32	38	46	55	67	81	97

[1] These CT values achieve greater than a 99.99 percent inactivation of viruses. CT values between the indicated pH values may be determined by linear interpolation. CT values between the indicated temperatures of different tables may be determined by linear interpolation. If no interpolation is used, use the $CT_{99.9}$ value at the lower temperature, and at the higher pH.

Table 27

-CT Values ($CT_{99.9}$) Percent Inactivation of *Giardia Lamblia* Cysts by Chlorine Dioxide and Ozone[1]						
Temperature						
	<1ºC	5 ºC	10 ºC	15 ºC	20 ºC	>25 ºC
Chlorine dioxide	63	26	23	19	15	11
Ozone	2.9	1.9	1.4	0.95	0.72	0.48

[1] These CT values achieve greater than 99.99 percent inactivation of viruses. CT values between the indicated temperatures may be determined by linear interpolation. If no interpolation is used, use the $CT_{99.9}$ value at the lower temperature for determining $CT_{99.9}$ values between indicated temperatures.

Table 28

CT Values ($CT_{99.9}$) for 99.9 Percent Inactivation of *Giardia Lamblia* Cysts by Chloramines[1]					
Temperature					
<1ºC	5 ºC	10 ºC	15 ºC	20 ºC	>25 ºC
3,800	2,200	1,850	1,500	1,100	750

[1] These values are for pH values of 6 to 9. These CT values may be assumed to achieve greater than 99.99 percent inactivation of viruses only if chlorine is added and mixed in the water prior to the addition of ammonia. If this condition is not met, the system must demonstrate, based on demonstration studies or other information, as approved by the Authority, that the system is achieving at least 99.99 percent inactivation of viruses. CT values between the indicated temperatures may be determined by linear interpolation. If no interpolation is used, use the $CT_{99.9}$ value at the lower temperature for determining $CT_{99.9}$ values between indicated temperatures.

(D) The total inactivation ratio must be calculated as follows:

(i) If the system uses only one point of disinfectant application, the system may determine the total inactivation ratio based on either of the following two methods:

(I) One inactivation ratio (CTcalc/CTrequired) is determined before or at the first customer during peak hourly flow and if the CTcalc/CTrequired is greater than or equal to 1.0, the *Giardia lamblia* inactivation requirement has been achieved; or

(II) Successive CTcalc/CTrequired values representing sequential inactivation ratios, are determined between the point of disinfection application and a point before or at the first customer during peak hourly flow. Under this alternative, the following method must be used to calculate the total inactivation ratio:
Step 1: Determine CTcalc/CTrequired for each sequence
Step 2: Add the CTcalc/CTrequired values together
Step 3: If (CTcalc/CTrequired) is greater than or equal to 1.0, the *Giardia lamblia* inactivation requirement has been achieved.

(ii) If the system uses more than one point of disinfectant application before or at the first customer, the system must determine the CT value of each disinfection sequence immediately prior to the next point of disinfectant application during peak hourly flow. The CTcalc/CTrequired value of each sequence and CTcalc/CTrequired must be calculated using the methods in subparagraph (5)(a)(D)(i)(II) of this rule to determine if the system is in compliance with OAR 333-061-0032(3)(a) or (5)(a).

(E) The residual disinfectant concentration of the water entering the distribution system must be monitored continuously, and the lowest value must be recorded each day. If there is a failure in the continuous monitoring equipment, grab sampling every 4 hours may be conducted in lieu of continuous monitoring, but for no more than 5 working days following the failure of the equipment, and systems serving 3,300 or fewer persons may take grab samples in lieu of providing continuous monitoring on an ongoing basis at the frequencies prescribed in Table 29.

Table 29	
Population	Samples per day
500 or Less	1
501 to 1,000	2
1,001 to 2,500	3
2,501 to 3,300	4

The day's samples cannot be taken at the same time. The sampling intervals are subject to Authority review and approval. If at any time the residual disinfectant concentration falls below 0.2 mg/l in a system using grab sampling in lieu of continuous monitoring, the system must take a grab sample every 4 hours until the residual disinfectant concentration is ≥ 0.2 mg/l.

(F) The residual disinfectant concentration must be measured at least at the same points in the distribution system and at the same time as total coliforms are sampled as specified in section (6) of this rule, except that the Authority may allow a public water system which uses both a surface water source or a groundwater source under the direct influence of surface water, and a groundwater source, to take disinfectant residual samples at points other than the total coliform sampling points if the Authority determines that such points are more representative of treated (disinfected) water quality within the distribution system.

(b) A public water system that uses a surface water source or a groundwater source under the direct influence of surface water that does provide filtration treatment must monitor water quality as specified in this subsection when filtration treatment is installed.

(A) Turbidity

(i) Turbidity measurements as required by section OAR 333-061-0032(4) must be performed on representative samples of the system's filtered water, measured prior to any storage, every four hours (or more frequently) that the system serves water to the public. A public water system may substitute continuous turbidity monitoring for grab sample monitoring if it validates the continuous measurement for accuracy on a regular basis using a protocol approved by the Authority.

(ii) Calibration of all turbidimeters must be performed according to manufacturer's specifications, but no less frequently than quarterly.

(iii) Water systems using conventional filtration must measure settled water turbidity every day.

(iv) Water systems using conventional or direct filtration must conduct turbidity profiles for individual filters every calendar quarter.

(v) For any systems using slow sand filtration or filtration treatment other than conventional treatment, direct filtration, or diatomaceous earth filtration, the Authority may reduce the sampling frequency to once per day if it determines that less frequent monitoring is sufficient to indicate effective filtration performance.

(vi) Systems using lime softening may acidify representative samples prior to analysis using a method approved by the Authority.

(B) The actual CT value achieved must be calculated each day the treatment plant is in operation. The parameters necessary to determine the actual CT value must be monitored as follows:

(i) The temperature of the disinfected water must be measured at least once per day at each residual disinfectant concentration sampling point as prescribed in subparagraph (5)(b)(B)(iv) of this rule.

(ii) If the system uses chlorine, the pH of the disinfected water must be measured at least once per day at each chlorine residual disinfectant concentration sampling point.

(iii) The disinfectant contact time(s) ("T") in minutes must be determined for each day during peak hourly flow, based on results of a tracer study conducted according to OAR 333-061-0050(6)(a)(R), or other method approved by the Authority.

(iv) The residual disinfectant concentration(s) ("C") in mg/l before or at the first customer must be measured each day during peak hourly flow.

(v) If a system uses a disinfectant other than chlorine, the system may demonstrate to the Authority, through the use of protocol approved by the Authority for on-site disinfection challenge studies or other information satisfactory to the Authority, or other operational parameters are adequate to demonstrate that the system is achieving the minimum inactivation rates required by OAR 333-061-0032(5)(a).

(C) The inactivation ratio calculations as prescribed in paragraph (5)(a)(D) of this rule.

(D) Monitoring for the residual disinfectant concentration entering the distribution system shall be performed as prescribed in paragraph (5)(a)(E) of this rule.

(E) Monitoring for the residual disinfectant concentration in the distribution system shall be performed as prescribed in paragraph (5)(a)(F) of this rule.

(F) Water systems using membrane filtration must perform direct integrity testing on each filter canister at least daily, per OAR 333-061-0036(5)(d)(B).

(c) Inactivation credit for water systems using a disinfectant other than chlorine for pathogen inactivation.

(A) Calculation of CT values.

(i) CT is the product of the disinfectant concentration (C, in milligrams per liter) and actual disinfectant contact time (T, in minutes). Systems with treatment credit for chlorine dioxide or ozone as prescribed by paragraphs (5)(c)(B) or (C) of this rule must calculate CT at least once per day, with both C and T measured during peak hourly flow as specified in paragraph (5)(b)(B) of this rule.

(ii) Systems with several disinfection segments in sequence must calculate CT for each segment where treatment credit is sought, where a disinfection segment is defined as a treatment unit process with a measurable disinfectant residual level and a liquid volume. If using this approach, water systems must add the *Cryptosporidium* CT values in each segment to determine the total CT for the treatment plant.

(B) CT values for chlorine dioxide and ozone.

(i) Systems receive the *Cryptosporidium* treatment credit listed in Table 30 by meeting the corresponding chlorine dioxide CT value for the applicable water temperature, as described in paragraph (5)(c)(A) of this rule.

Table 30

CT Values (mg-min/L) for *Cryptosporidium* Inactivation by Chlorine Dioxide*

Log Credit	Water Temperature, Deg. C										
	≤0.5	1	2	3	5	7	10	15	20	25	30
0.25	159	153	140	128	107	90	69	45	29	19	12
0.5	319	305	279	256	214	180	138	89	58	38	24
1.0	637	610	558	511	429	360	277	179	116	75	49
1.5	956	915	838	767	643	539	415	268	174	113	73
2.0	1275	1220	1117	1023	858	719	553	357	232	150	98
2.5	1594	1525	1396	1278	1072	899	691	447	289	188	122
3.0	1912	1830	1675	1534	1286	1079	830	536	347	226	147

*Systems may use this equation to determine log credit between the indicated values: Log credit = $(0.001506 \times (1.09116)^{(temp)}) \times CT$.

(ii) Systems receive the *Cryptosporidium* treatment credit listed in Table 31 by meeting the corresponding ozone CT values for the applicable water temperature, as described in paragraph (5)(c)(A) of this rule.

Table 31
CT Values (mg-min/L) for *Cryptosporidium* Inactivation by Ozone*

Log Credit	Water Temperature, Deg. C										
	≤0.5	1	2	3	5	7	10	15	20	25	30
0.25	6.0	5.8	5.2	4.8	4.0	3.3	2.5	1.6	1.0	0.6	0.39
0.5	12	12	10	9.5	7.9	6.5	4.9	3.1	2.0	1.2	0.78
1.0	24	23	21	19	16	13	9.9	6.2	3.9	2.5	1.6
1.5	36	35	31	29	24	20	15	9.3	5.9	3.7	2.4
2.0	48	46	42	38	32	26	20	12	7.8	4.9	3.1
2.5	60	58	52	48	40	33	25	16	9.8	6.2	3.9
3.0	72	69	63	57	47	39	30	19	12	7.4	4.7

*Systems may use this equation to determine log credit between the indicated values: Log credit = (0.0397 x (1.09757)(^{temp}) x CT.

(C) Site-specific study. The Authority may approve alternative chlorine dioxide or ozone CT values to those listed in Table 30 or Table 31 on a site-specific basis. The Authority must base this approval on a site-specific study conducted by a water system that follows an Authority approved protocol.

(D) Ultraviolet light. Systems receive *Cryptosporidium*, *Giardia lamblia*, and virus treatment credits for ultraviolet light (UV) reactors by achieving the corresponding UV dose values shown in subparagraph (5)(c)(D)(i) of this rule. Systems must validate and monitor UV reactors as described in OAR 333-061-0050(5)(k) and subparagraphs (5)(c)(D)(ii) and (iii) of this rule to demonstrate that they are achieving a particular UV dose value for treatment credit.

(i) UV dose table. The treatment credits listed in this table are for UV light at a wavelength of 254 nm as produced by a low pressure mercury vapor lamp. To receive treatment credit for other lamp types, systems must demonstrate an equivalent germicidal dose through reactor validation testing as specified in OAR 333-061-0050(5)(k). The UV dose values in Table 32 are applicable to post-filter applications of UV in filtered water systems, unfiltered water systems, and groundwater systems required to disinfect as prescribed by OAR 333-061-0032(6).

Table 32
UV Dose Table for *Cryptosporidium*, *Giardia lamblia*, and Virus Inactivation Credit

Log Credit	*Cryptosporidium* UV dose (mJ/cm^2)	*Giardia Lamblia* UV dose (mJ/cm^2)	Virus UV dose (mJ/cm^2)
0.5	1.6	1.5	39
1.0	2.5	2.1	58
1.5	3.9	3.0	79
2.0	5.8	5.2	100
2.5	8.5	7.7	121
3.0	12	11	143
3.5	15	15	163
4.0	22	22	186

(ii) Reactor monitoring. Systems must monitor their UV reactors to determine if the reactors are operating within validated conditions, as prescribed by OAR 333-061-0050(5)(k). This monitoring must include UV intensity as measured by a UV sensor, flow rate, lamp status, UV Transmittance, and other parameters the Authority designates based on UV reactor operation. Water systems must verify the calibration of UV sensors at least monthly, and must recalibrate sensors in accordance with the EPA UV Disinfection Guidance Manual as necessary.

(iii) Water systems must monitor the percentage of water delivered to the public that was treated within validated conditions for the required UV dose. If less than 95 percent of water delivered was within validated conditions, a Tier 2 public notice must be issued as prescribed by OAR 333-061-0042(3)(b).

(d) Requirements for individual filter effluent turbidity monitoring

(A) In addition to subsection (5)(b) of this rule, water systems using surface water or groundwater under the direct influence of surface water where treatment includes conventional filtration treatment or direct filtration treatment must conduct continuous turbidity monitoring for each individual filter and must calibrate turbidimeters using the procedure specified by the manufacturer. Individual filter monitoring results must be recorded every 15 minutes. If there is a failure in the continuous turbidity monitoring equipment, the water system must conduct grab sampling every four hours in lieu of continuous monitoring until the turbidimeter is repaired and back on-line. The water system serving at least 10,000 people has a maximum of five working days after failure to repair the equipment or the water system is in violation. The water system serving less than 10,000 people has a maximum of 14 days to resume continuous monitoring before a violation is incurred. If the water system's conventional or

direct filtration treatment plant consists of two or fewer filters, continuous monitoring of the combined filter effluent turbidity may be substituted for continuous monitoring of individual filter effluent turbidity. For systems serving less than 10,000 people, the recording and calibration requirements that apply to individual filters also apply when continuous monitoring of the combined filter effluent turbidity is substituted for the continuous monitoring of individual filter effluent turbidity;

(B) Direct integrity testing for membrane filtration. Water systems must conduct direct integrity testing in a manner that demonstrates a removal efficiency equal to or greater than the removal credit awarded to the membrane filtration process, and that meets the requirements described in this paragraph. A direct integrity test is defined as a physical test applied to a membrane unit in order to identify and isolate integrity breaches (that is, one or more leaks that could result in contamination of the filtrate).

(i) The direct integrity test must be independently applied to each membrane unit in service. A membrane unit is defined as a group of membrane modules that share common valving that allows the unit to be isolated from the rest of the water system for the purpose of integrity testing or other maintenance.

(ii) The direct integrity method must have a resolution of three micrometers or less, where resolution is defined as the size of the smallest integrity breach that contributes to a response from the direct integrity test.

(iii) The direct integrity test must have a sensitivity sufficient to verify the log treatment credit awarded to the membrane filtration process by the Authority, where sensitivity is defined as the maximum log removal value that can be reliably verified by a direct integrity test. Sensitivity must be determined using the approach in either subparagraphs (5)(d)(B)(iii)(I) or (II) of this rule as applicable to the type of direct integrity test the system uses.

(I) For direct integrity tests that use an applied pressure or vacuum, the direct integrity test sensitivity must be calculated according to the following equation:

LRVDIT = LOG10 (Qp /(VCF x Qbreach))

Where:

LRVDIT = the sensitivity of the direct integrity test;

Qp = total design filtrate flow from the membrane unit;

Qbreach = flow of water from an integrity breach associated with the smallest integrity test response that can be reliably measured; and
VCF = volumetric concentration factor. The volumetric concentration factor is the ratio of the suspended solids concentration on the high pressure side of the membrane relative to that in the feed water.

(II) For direct integrity tests that use a particulate or molecular marker, the direct integrity test sensitivity must be calculated according to the following equation:
LRVDIT = LOG10(Cf)-LOG10(Cp)
Where:
LRVDIT = the sensitivity of the direct integrity test;
Cf = the typical feed concentration of the marker used in the test; and
Cp = the filtrate concentration of the marker from an integral membrane unit.

(iv) Water systems must establish a control limit within the sensitivity limits of the direct integrity test that is indicative of an integral membrane unit capable of meeting the removal credit awarded by the Authority.

(v) If the result of a direct integrity test exceeds the control limit established under subparagraph (5)(d)(B)(iv) of this rule, the water system must remove the membrane unit from service. Water systems must conduct a direct integrity test to verify any repairs, and may return the membrane unit to service only if the direct integrity test is within the established control limit.

(vi) Water systems must conduct direct integrity testing on each membrane unit at a frequency of not less than once each day that the membrane unit is in operation. The Authority may approve less frequent testing, based on demonstrated process reliability, the use of multiple barriers effective for *Cryptosporidium*, or reliable process safeguards.

(C) Indirect integrity monitoring for membrane filtration. Water systems must conduct continuous indirect integrity monitoring on each membrane unit according to the criteria specified in this paragraph. Indirect integrity monitoring is defined as monitoring some aspect of filtrate water quality that is indicative of the removal of particulate matter. A water system that implements continuous direct integrity testing of membrane units in accordance with the criteria specified in subparagraphs (5)(d)(B)(i) through (v) of this rule is not subject to the requirements for continuous indirect integrity monitoring. Water

systems must submit a monthly report to the Authority summarizing all continuous indirect integrity monitoring results triggering direct integrity testing and the corrective action that was taken in each case.

(i) Unless the Authority approves an alternative parameter, continuous indirect integrity monitoring must include continuous filtrate turbidity monitoring.

(ii) Continuous monitoring must be conducted at a frequency of no less than once every 15 minutes.

(iii) Continuous monitoring must be separately conducted on each membrane unit.

(iv) If indirect integrity monitoring includes turbidity and the filtrate turbidity readings are above 0.15 NTU for a period greater than 15 minutes (that is, two consecutive 15-minute readings above 0.15 NTU), direct integrity testing in accordance with subparagraphs (5)(d)(B)(i) through (v) of this rule must immediately be performed on the associated membrane unit.

(v) If indirect integrity monitoring includes an Authority-approved alternative parameter and if the alternative parameter exceeds an Authority approved control limit for a period greater than 15 minutes, direct integrity testing in accordance with subparagraphs (5)(d)(B)(i) through (v) of this rule must immediately be performed on the associated membrane unit.

(e) Source water monitoring. Wholesale water systems, as defined in OAR 333-061-0020(222), must comply with the requirements of this rule based on the population of the largest water system in the combined distribution system. Water systems required to provide filtration treatment must comply with the requirements of this rule whether or not the water system is currently operating filtration treatment. The requirements of this rule for unfiltered water systems only apply to those water systems that met and continue to meet the requirements of OAR 333-061-0032(2) and (3).

(A) Initial round. Water systems must conduct monitoring as prescribed by this paragraph, and following the schedule specified in paragraph (5)(e)(C) of this rule, unless the system meets the monitoring exemption criteria specified in paragraph (5)(e)(D) of this rule.

(i) Filtered water systems serving at least 10,000 people must sample their source water for *Cryptosporidium*, *E. coli*, and turbidity at least monthly for 24 months.

(ii) Unfiltered water systems serving at least 10,000 people must sample their source water for *Cryptosporidium* at least monthly for 24 months.

(iii) Filtered water systems serving less than 10,000 people must sample their source water for *E. coli* at least once every two weeks for 12 months.

(I) Filtered water systems serving fewer than 10,000 people may avoid *E. coli* monitoring if the system monitors for *Cryptosporidium* as prescribed in subparagraph (5)(e)(A)(iv) of this rule. The water system must notify the Authority no later than three months prior to the date the system is otherwise required to start *E. coli* monitoring under paragraph (5)(e)(C) of this rule.

(iv) Filtered water systems serving fewer than 10,000 people must sample their source water for *Cryptosporidium* at least twice per month for 12 months or at least monthly for 24 months if they meet one of the following, based on monitoring conducted in accordance with subparagraph (5)(e)(A)(iii) of this rule:

(I) The annual mean *E. coli* concentration, in the surface water source, is greater than 100 *E. coli*/100 mL;

(II) The water system does not conduct *E. coli* monitoring as described in subparagraph (5)(e)(A)(iii) of this rule; or

(III) Water systems using groundwater under the direct influence of surface water must comply with the requirements of this paragraph based on the *E. coli* level specified in subparagraph (5)(e)(A)(iv)(I) of this rule.

(v) Unfiltered water systems serving fewer than 10,000 people must sample their source water for *Cryptosporidium* at least twice per month for 12 months or at least monthly for 24 months.

(vi) Water systems may sample more frequently than required under this section if the sampling frequency is evenly spaced throughout the monitoring period.

(vii) The Authority may approve monitoring for an indicator other than *E. coli* to comply with the monitoring prescribed by subparagraph (5)(e)(A)(iii) of this rule for filtered water systems serving fewer than 10,000 people. The Authority may approve an alternative to the *E. coli* concentrations that trigger *Cryptosporidium* monitoring as specified in subparagraphs (5)(e)(A)(iv)(I) and (III) of this rule. The Authority's approval to the system will be in writing and will include the basis for the Authority's determination that the alternative indicator or trigger level will provide a more accurate identification of whether a water system will exceed the Bin 1 *Cryptosporidium* level specified in Table 8 in OAR 333-061-0032(4)(f)(F).

(B) Water systems must conduct a second round of source water monitoring that meets the requirements for monitoring parameters, frequency, and duration described in paragraph (5)(e)(A) of this rule, and according to the schedule in paragraph (5)(e)(C) of this rule, unless they meet the monitoring exemption criteria specified in paragraph (5)(e)(D) of this rule.

(C) Monitoring schedule. Systems must begin monitoring as required in paragraphs (5)(e)(A) and (B) of this rule no later than the month beginning with the date listed in Table 33.

Table 33
Source water monitoring start dates

Systems that serve	Must begin the first round of source water monitoring no later than the month beginning	And must begin the second round of source water monitoring no later than the month beginning
At least 100,000 people	October 1, 2006	April 1, 2015
From 50,000 to 99,999 people	April 1, 2007	October 1, 2015
From 10,000 to 49,999 people	April 1, 2008	October 1, 2016
Fewer than 10,000 people and monitor for *E. coli* (filtered water systems only)	October 1, 2008	October 1, 2017
Fewer than 10,000 and monitor for *Cryptosporidium**	April 1, 2010	April 1, 2019
State-Regulated water systems	April 1, 2012	April 1, 2021

*Applies to filtered water systems that meet the conditions of subparagraph (5)(e)(A)(iv) of this rule and unfiltered water systems.

(D) Monitoring avoidance.

(i) Filtered water systems are not required to conduct source water monitoring as prescribed by this subsection if the system will provide a total of at least 5.5-log of treatment for *Cryptosporidium*, equivalent to meeting the treatment requirements of Bin 4 in OAR 333-061-0032(4)(g) and OAR 333-061-0032(13) through (18).

(ii) Unfiltered water systems are not required to conduct source water monitoring as prescribed by this subsection if the system will provide a total of at least 3-log *Cryptosporidium* inactivation, equivalent to meeting the treatment requirements for unfiltered systems with a mean *Cryptosporidium* concentration of greater than 0.01 oocysts/L in OAR 333-061-0032(3)(e).

(iii) If a water system chooses to provide the level of treatment specified in subparagraph (5)(e)(D)(i) or (ii) of this rule, rather than conducting source water monitoring, the water system

must notify the Authority in writing no later than the date the system is otherwise required to submit a sampling schedule for monitoring as prescribed by OAR 333-061-0036(5)(f)(A). A water system may choose to cease source water monitoring at any point after it has initiated monitoring if it notifies the Authority in writing that it will provide this level of treatment. Water systems must install and operate technologies to provide this level of treatment by the applicable treatment compliance date in OAR 333-061-0032(1)(a)(F).

(E) Seasonal plants. Systems with surface water or GWUDI treatment plants that operate for only part of the year must conduct source water monitoring in accordance with this subsection, but with the following modifications:

(i) Water systems must sample their source water only during the months that the plant is in use unless the Authority specifies another monitoring period based on plant operating practices.

(ii) Water systems with treatment plants that operate less than six months per year, and that monitor for *Cryptosporidium*, must collect at least six *Cryptosporidium* samples per year for two years of monitoring. Samples must be evenly spaced throughout the period the plant operates.

(F) New sources. A water system that begins using a new source of surface water or GWUDI after the system is required to begin monitoring as prescribed in paragraph (5)(e)(C) of this rule must monitor the new source on a schedule the Authority approves. Source water monitoring must meet the requirements of this subsection, and the water system must also meet the bin classification and *Cryptosporidium* treatment requirements of OAR 333-061-0032 for the new source on a schedule the Authority approves.

(i) This applies to water systems using surface water or GWUDI sources that begin operation after the monitoring start date applicable to the system's size specified in Table 33.

(ii) The water system must begin a second round of source water monitoring no later than six years following determination of the mean *Cryptosporidium* level or initial bin classification as prescribed by OAR 333-061-0032(2) or (4) respectively, as applicable.

(G) Failure to collect any source water sample in accordance with the sampling requirements, schedule, sampling location, analytical method, approved laboratory, and reporting requirements of this section is a monitoring violation.

(H) Grandfathering monitoring data. Systems may use monitoring data collected prior to the applicable monitoring start date in paragraph (5)(e)(C) of this rule to meet the initial source water monitoring requirements in paragraph (5)(e)(A) of this rule. Grandfathered data may substitute for an equivalent number of months at the end of the monitoring period. All data submitted under this paragraph must meet the requirements in subsection (5)(h) of this rule.

(f) Source water sampling schedules.

(A) Water systems required to conduct source water monitoring as prescribed in subsection (5)(e) of this rule must submit a sampling schedule that specifies the calendar dates when the system will collect each required sample.

(i) Water systems must submit sampling schedules to the Authority, no later than three months prior to the applicable date listed in paragraph (5)(e)(C) of this rule, for each round of required monitoring.

(ii) If the Authority does not respond to a water system regarding its sampling schedule, the system must sample at the reported schedule.

(B) Water systems must collect samples within a five-day period, starting two days before the scheduled sampling date and ending two days after. The five-day period applies to each of the dates indicated in the sampling schedule unless one of the following conditions applies:

(i) An extreme condition or situation exists that may pose danger to the sample collector or that cannot be avoided, and that prevents the water system from sampling in the scheduled five-day period. In this case, the water system must sample as close to the scheduled date as possible unless the Authority approves an alternative sampling date. The water system must submit an explanation for the delayed sampling date to the Authority concurrent with the submittal of the sample to the laboratory; or

(ii) A water system is unable to report a valid analytical result for the scheduled sampling date due to equipment failure, loss of or damage to the sample, failure to comply with the analytical method requirements (including the quality control requirements), or the failure of an approved laboratory to analyze the sample.

(I) In this case the water system must collect a replacement sample as prescribed in subparagraph (5)(f)(B)(ii)(II) of this rule.

(II) The system must collect the replacement sample not later than 21 days after receiving information that an

analytical result cannot be reported for the scheduled date unless the water system demonstrates that collecting a replacement sample within this time frame is not feasible or the Authority approves an alternative re-sampling date. The system must submit an explanation for the delayed sampling date to the Authority concurrent with the submittal of the sample to the laboratory.

(iii) Water systems that fail to meet the criteria of paragraph (5)(f)(B) of this rule for any required source water sample must revise their sampling schedules to add dates for collecting all missed samples. Water systems must submit the revised sampling schedule to the Authority for approval prior to beginning collecting the missed samples.

(g) Source water sampling locations.

(A) Water systems required to conduct source water monitoring as prescribed in subsection (5)(e) of this rule must collect samples for each plant that treats a surface water or GWUDI source. Where multiple plants draw water from the same influent, such as the same pipe or intake, the Authority may approve one set of monitoring results to be used to satisfy the requirements for all treatment plants.

(B) Water systems must collect source water samples prior to chemical treatment, such as coagulants, oxidants and disinfectants, unless the system meets the following condition:

(i) The Authority may approve a water system to collect a source water sample after chemical treatment if the Authority determines that collecting a sample prior to chemical treatment is not feasible for the system and that the chemical treatment is unlikely to have a significant adverse effect on the analysis of the sample.

(C) Water systems that recycle filter backwash water must collect source water samples prior to the point of filter backwash water addition.

(D) Bank filtration.

(i) Water systems that receive *Cryptosporidium* treatment credit for bank filtration as an alternate filtration technology as specified by OAR 333-061-0032(9) must collect source water samples in the surface water source prior to bank filtration.

(ii) Water systems that use bank filtration as pretreatment to a filtration plant must collect source water samples from the well, after bank filtration. Use of bank filtration during monitoring must be consistent with routine operational practice. Water systems collecting samples after a bank filtration process may

not receive treatment credit for the bank filtration prescribed by OAR 333-061-0032(9).

(E) Multiple sources. Water systems with treatment plants that use multiple water sources, including multiple surface water sources and blended surface water and groundwater sources, must collect samples as specified in subparagraph (5)(g)(E)(i) or (ii) of this rule. The use of multiple sources during monitoring must be consistent with routine operational practice.

(i) If a sampling tap is available where the sources are combined prior to treatment, water systems must collect samples from this tap.

(ii) If a sampling tap where the sources are combined prior to treatment is not available, systems must collect samples at each source near the intake on the same day and must comply with either subparagraph (5)(g)(E)(ii)(I) or (II) below for sample analysis.

(I) Water systems may composite samples from each source into one sample prior to analysis. The volume of sample from each source must be weighted according to the proportion of the source in the total plant flow at the time the sample is collected.

(II) Water systems may analyze samples from each source separately and calculate a weighted average of the analysis results for each sampling date. The weighted average must be calculated by multiplying the analysis result for each source by the fraction the source contributed to total plant flow at the time the sample was collected and then adding these values.

(F) Additional requirements. Water systems must submit a description of their sampling location(s) to the Authority at the same time as the sampling schedule required under subsection (5)(f) of this rule. This description must address the position of the sampling location in relation to the system's water source(s) and treatment processes, including pretreatment, points of chemical treatment, and filter backwash recycle. If the Authority does not respond to a water system regarding sampling location(s), the system must sample at the reported location(s).

(h) Grandfathering previously collected data.

(A) Water systems may comply with the initial source water monitoring requirements of paragraph (5)(e)(A) of this rule by grandfathering sample results collected before the system is required to begin monitoring. To be grandfathered, the sample results and analysis must

meet the criteria in this section and the Authority must approve the previously sampled data.

(i) A filtered water system may grandfather *Cryptosporidium* samples to meet the monitoring requirements of paragraph (5)(e)(A) of this rule when the system does not have corresponding *E. coli* and turbidity samples.

(ii) A water system that grandfathers *Cryptosporidium* samples is not required to collect the *E. coli* and turbidity samples when the system completes the requirements for *Cryptosporidium* monitoring under paragraph (5)(e)(A) of this rule.

(B) The analysis of grandfathered *E. coli* and *Cryptosporidium* samples must meet the analytical method and approved laboratory requirements of subsections (1)(a) and (1)(c) of this rule.

(C) The sampling location of grandfathered samples must meet the conditions specified in subsection (5)(g) of this rule.

(D) Grandfathered *Cryptosporidium* samples must have been collected no less frequently than each calendar month on a regular schedule, and no earlier than January 1999. Sample collection intervals may vary for the conditions specified in subparagraph (5)(f)(B)(i) through (ii) of this rule if the system provides documentation of the condition when reporting monitoring results.

(i) The Authority may approve grandfathering of previously collected data where there are time gaps in the sampling frequency if the water system conducts additional monitoring as specified by the Authority to ensure that the data used to comply with the initial source water monitoring requirements of paragraph (5)(e)(A) of this rule are seasonally representative and unbiased.

(ii) Water systems may grandfather previously collected data where the sampling frequency within each month varied. If the *Cryptosporidium* sampling frequency varied, water systems must follow the monthly averaging procedure in OAR 333-061-0032(2)(c)(B) or OAR-333-061-0032(4)(f)(E) as applicable, when calculating the bin classification for filtered water systems or the mean *Cryptosporidium* concentration for unfiltered water systems.

(E) Reporting monitoring results for grandfathering. Water systems that request to grandfather previously collected monitoring results must report the following information by the applicable dates listed in this paragraph.

(i) Water systems must report that they intend to submit previously collected monitoring. This report must specify the number of

previously collected results the system will submit, the dates of the first and last sample, and whether a system will conduct additional source water monitoring to meet the requirements of paragraph (5)(e)(A) of this rule. Water systems must report this information no later than the date the sampling schedule is required as prescribed by subsection (5)(f) of this rule.

(ii) Water systems must report previously collected monitoring results for grandfathering, along with the associated documentation listed in subparagraphs (5)(h)(E)(ii)(I) through (IV) of this rule, no later than two months after the applicable date listed in paragraph (5)(e)(C) of this rule.

(I) For each sample result, water systems must report the applicable data elements specified by OAR 333-061-0040(1)(o).

(II) Water systems must certify that the reported monitoring results include all results the system generated during the time period beginning with the first reported result and ending with the final reported result. This applies to samples that were collected from the sampling location specified for source water monitoring under this paragraph and analyzed in accordance with subsection (1)(a) of this rule.

(III) Water systems must certify that the samples were representative of a plant's source water(s) and that the source water(s) have not changed. Water systems must report a description of the sampling location(s), which must address the position of the sampling location in relation to the system's water source(s) and treatment processes, including points of chemical addition and filter backwash recycle.

(IV) For *Cryptosporidium* samples, the laboratory or laboratories that analyzed the samples must provide a letter certifying that the quality control criteria in accordance with subsection (1)(a) of this rule were met for each sample batch associated with the reported results. Alternatively, the laboratory may provide bench sheets and sample examination report forms for each field, matrix spike, IPR, OPR, and method blank sample associated with the reported results.

(F) If the Authority determines that a previously collected data set submitted for grandfathering was generated during source water conditions that were not normal for the system, such as a drought, the

Authority may disapprove the data. Alternatively, the Authority may approve the previously collected data if the water system reports additional source water monitoring data, as determined by the Authority, to ensure that the data set used under OAR 333-061-0032(4)(f) or 0032(2)(c) represents average source water conditions for the system.

(G) If a water system submits previously collected data that fully meets the number of samples required for initial source water monitoring required by paragraph (5)(e)(A) of this rule, and some of the data is rejected due to not meeting the requirements of this subsection, systems must conduct additional monitoring to replace rejected data on a schedule the Authority approves. Water systems are not required to begin this additional monitoring until two months after notification that data has been rejected and that additional monitoring is necessary.

(6) Coliform Bacteria and Microbiological Contaminants

(a) General requirements for coliform bacteria sampling

(A) Sample Handling Requirements

(i) The standard sample volume required for analysis, regardless of analytical method used, is 100 ml.

(ii) Only the presence or absence of total coliforms and *E. coli* is required to be determined, not a determination of density.

(iii) Test medium incubation must be initiated within 30 hours of sample collection. Samples should be held below 10 deg. C during transit.

(iv) If water having residual chlorine (measured as free, combined, or total chlorine) is to be analyzed, sufficient sodium thiosulfate ($Na_2S_2O_3$) must be added to the sample bottle before sterilization to neutralize any residual chlorine in the water sample. Dechlorination procedures are addressed in Section 9060A.2 of *Standard Methods for the Examination of Water and Wastewater* (20th and 21st editions).

(B) Water suppliers must comply with the repeat monitoring requirements and *E. coli* analytical requirements specified in subsection (6)(g) of this rule following any total coliform-positive sample collected according to subsections (6)(b) through (6)(f) of this rule.

(C) Water suppliers must determine whether a coliform investigation trigger as specified in OAR 333-061-0078(2) has been exceeded once all monitoring as required by subsections (6)(b) through (6)(g) of this rule has been completed for a calendar month.

(D) If a routine or repeat sample is total coliform-positive, the sample must be analyzed to determine if *E. coli* are present. If *E. coli* are present, the water supplier must notify the Authority by the end of the

day when the water supplier is notified of the test result, unless the water supplier is notified of the result after the Authority office is closed, in which case the water supplier must notify the Authority before the end of the next business day.

(E) The Authority may, on a case-by-case basis, allow a water supplier to forgo *E. coli* testing on a total coliform-positive sample if that water supplier assumes that the total coliform-positive sample is *E. coli*-positive. Accordingly, the water supplier must notify the Authority as specified in paragraph (6)(a)(D) of this rule and take action appropriate for exceeding the MCL for *E. coli* as specified in OAR 333-061-0030(4).

(F) The Authority may invalidate a total coliform-positive sample only if the conditions specified in subparagraph (6)(a)(F)(i), (ii), or (iii) of this rule are met. A total coliform-positive sample invalidated according to this paragraph does not count toward meeting the minimum monitoring requirements of this rule.

(i) The laboratory establishes that improper sample analysis caused the total coliform-positive result.

(ii) The Authority, on the basis of the results of repeat samples collected as required by subsection (6)(g) of this rule, determines that the total coliform-positive sample resulted from a domestic or other non-distribution system plumbing problem. The Authority cannot invalidate a sample on the basis of repeat sample results unless all repeat sample(s) collected at the same tap as the original total coliform-positive sample are also total coliform-positive, and all repeat samples collected at a location other than the original tap are total coliform-negative (for example, the Authority cannot invalidate a total coliform-positive sample on the basis of repeat samples if all the repeat samples are total coliform-negative, or if the water system has only one service connection).

(iii) The Authority has substantial grounds to believe that a total coliform-positive result is due to a circumstance or condition that does not reflect water quality in the distribution system. In this case, the water supplier must still collect all repeat samples required by subsection (6)(g) of this rule, and use them to determine whether a coliform investigation trigger as specified in OAR 333-061-0078(2) has been exceeded. To invalidate a total coliform-positive sample under this paragraph, the decision and supporting rationale must be documented in writing, and approved and signed by the supervisor of the Authority official who recommended the decision. The written

documentation must state the specific cause of the total coliform-positive sample, and what action the water supplier has taken, or will take, to correct this problem. The Authority will not invalidate a total coliform-positive sample solely on the grounds that all repeat samples are total coliform-negative. If the Authority invalidates a sample according to this subparagraph the written documentation will be made available to the EPA or the public upon request.

(G) A laboratory must invalidate a total coliform sample (unless total coliforms are detected) if the sample produces a turbid culture in the absence of gas production using an analytical method where gas formation is examined (for example, the Multiple-Tube Fermentation Technique), produces a turbid culture in the absence of an acid reaction in the Presence-Absence (P–A) Coliform Test, or exhibits confluent growth or produces colonies too numerous to count with an analytical method using a membrane filter (for example, Membrane Filter Technique). If a laboratory invalidates a sample because of such interference, the system must collect another sample from the same location as the original sample within 24 hours of being notified of the interference problem, and have it analyzed for the presence of total coliforms. The water supplier must continue to re-sample within 24 hours and have the samples analyzed until it obtains a valid result. The Authority may waive the 24-hour time limit on a case-by-case basis.

(H) A total coliform-positive sample invalidated according to paragraphs (6)(a)(F) or (G) of this rule does not count toward meeting the minimum monitoring requirements specified in this section.

(I) Water suppliers must develop a written coliform sampling plan for every water system that they own or operate or for which they are responsible according to the criteria in this paragraph by March 31, 2016. The plan must identify sampling sites and a sample collection schedule that is representative of water throughout the distribution system. Water suppliers must collect total coliform samples according to the plan. Plans are subject to Authority review and revision.

(i) Monitoring required by subsections (6)(b) through (6)(g) of this rule may take place at a customer's premises, dedicated sampling station, or other designated sampling location. Routine and repeat sample sites and any sampling points necessary to meet the requirements of subsection (6)(i) of this rule must be reflected in the coliform sampling plan.

(ii) Samples must be collected at regular time intervals throughout the month, except that groundwater systems serving 4,900 or fewer people may collect all required samples on a single day if they are collected at different sites.

(iii) Water suppliers must collect at least the minimum number of required samples every month even if the MCL for *E. coli* as specified in OAR 333-061-0030(4) was exceeded or a coliform investigation trigger as specified in OAR 333-061-0078(2) was exceeded.

(iv) Water suppliers may use monitoring as a tool to assist in investigating problems whereby additional samples beyond the number required by this section may be collected to investigate potential problems in the distribution system. A water supplier collecting more routine samples than required in a month must include the results of the additional sampling in calculating whether a coliform investigation trigger as specified in OAR 333-061-0078(2) has been exceeded only if the samples are collected in accordance with an existing coliform sampling plan and are representative of water throughout the distribution system.

(v) Water suppliers must identify repeat monitoring locations in the coliform sampling plan. At least one repeat sample must be collected from the sampling tap where the original total coliform-positive sample was collected, at least one repeat sample must be collected at a tap within five service connections upstream and at least one repeat sample must be collected at a tap within five service connections downstream of the original sampling site unless the provisions of subparagraphs (6)(a)(I)(v)(I) or (6)(a)(I)(v)(II) of this rule are met. If a total coliform-positive sample is at the end of the distribution system, or one service connection away from the end of the distribution system, the Authority may allow an alternative sampling location in lieu of the requirement to collect at least one repeat sample upstream or downstream of the original sampling site. Except as provided for in subparagraph (6)(a)(I)(v)(II) of this rule, at water systems where triggered source water monitoring is required according to paragraph (6)(i)(A), groundwater source samples must be collected in addition to repeat samples as required by subsection (6)(g) of this rule.

(I) Water suppliers may propose repeat monitoring locations to the Authority that the water supplier believes to be

representative of a pathway for contamination of the distribution system. A water supplier may elect to specify either alternative fixed locations or criteria for selecting repeat sampling sites on a situational basis in a standard operating procedure (SOP) in its coliform sampling plan. The water supplier must design its SOP to focus the repeat samples at locations that best verify and determine the extent of potential contamination of the distribution system area based on specific situations. The Authority may modify the SOP or require alternative monitoring locations as needed.

(II) For groundwater systems serving 1,000 people or less, repeat sampling locations may be proposed that differentiate potential source water and distribution system contamination (for example, by sampling at entry points to the distribution system). A water system with a single groundwater source and a single service connection may request to collect repeat samples at the location for triggered source water monitoring. The Authority may approve the request if the water supplier demonstrates that the coliform sampling plan remains representative of water quality in the distribution system. If approved by the Authority, the sample result may be used to meet the monitoring requirements in both subsection (6)(g) and (6)(i) of this rule.

(III) Triggered source water monitoring locations as required by subsection (6)(i) of this rule must be identified in the plan in addition to the repeat samples required by subsection (6)(g) of this rule.

(IV) The Authority may review, revise, and approve, as appropriate, repeat sampling proposed by systems under subparagraphs (6)(a)(I)(v)(I) and (II) of this rule. The water supplier must demonstrate that the coliform sampling plan remains representative of the water quality in the distribution system. The Authority may determine that monitoring at the entry point to the distribution system (especially for groundwater systems without disinfection) is effective to differentiate between potential source water and distribution system problems.

(b) At non-transient non-community, transient non-community and state regulated water systems using only groundwater as defined in OAR 333-061-0020(89) and serving 1,000 people or less, one sample must be

collected for coliform bacteria every calendar quarter the water system provides water to the public. At seasonal water systems as defined in OAR 333-061-0020(168), monitoring is increased to one sample every month the system is in operation.

(A) For the purpose of determining a water supplier's eligibility to continue or qualify for quarterly monitoring according to the provisions of subparagraphs (6)(b)(C)(iv) or (6)(b)(D)(ii) of this rule at a transient non-community water system, the Authority may elect to not consider monitoring violations according to paragraph (6)(p)(A) of this rule if the missed sample is collected no later than the end of the monitoring period following the monitoring period in which the sample was missed. The water supplier must collect the make-up sample in a different week than the routine sample for that monitoring period and should collect the sample as soon as possible during the monitoring period.

(B) Water suppliers must submit to a special monitoring evaluation during each sanitary survey as specified in OAR 333-061-0076 to review the status of a water system, including the distribution system, and determine whether the system is on an appropriate monitoring schedule. After the Authority has performed the special monitoring evaluation, it may modify the system's monitoring schedule, as necessary, or it may allow the system to stay on its existing monitoring schedule, consistent with the provisions of this subsection.

(C) Monitoring must be increased to monthly the month following any of the events identified in subparagraphs (6)(b)(C)(i) through (6)(b)(C)(iv) of this rule. Monthly monitoring must continue until the requirements in subparagraph (6)(b)(D) of this rule are met. A water system prescribed monthly monitoring for reasons other than those identified in paragraphs (6)(b)(C)(i) through (6)(b)(C)(iv) of this rule is not considered to be on increased monitoring for the purposes of this paragraph and will be restored to quarterly monitoring at the discretion of the Authority.

(i) One level 2 coliform investigation or two level 1 coliform investigations are triggered as specified in OAR 333-061-0078(2) at a water system in a rolling 12 month period.

(ii) The MCL for *E. coli* is exceeded at a water system.

(iii) A violation as specified in OAR 333-061-0078(5) occurs at a water system.

(iv) Two violations as specified in subsection (6)(p) of this rule occur, or one violation as specified in subsection (6)(p) of this rule occurs and one level 1 coliform investigation as prescribed

by OAR 333-061-0078(2) is triggered during a rolling 12-month period for a water system.

(D) The Authority may reduce the monitoring frequency from monthly monitoring as specified in paragraph (6)(b)(C) of this rule to quarterly monitoring if the criteria specified in subparagraphs (6)(b)(D)(i) and (6)(b)(D)(ii) of this rule are met.

(i) A sanitary survey, level 2 coliform investigation or an equivalent site visit was completed by the Authority or another party authorized by the Authority within the previous 12 months, and the water system was found to be free of sanitary defects and to have a protected water source; and

(ii) The water supplier ensured the following at the water system for at least the previous 12 consecutive months:

(I) No MCL exceedances as prescribed by OAR 333-061-0030(4) or 40 CFR 141.63;

(II) That all samples required by this rule and 40 CFR 141.21 were collected and reported to the Authority;

(III) No coliform investigation trigger exceedances as prescribed by OAR 333-061-0078(2); and

(IV) No coliform investigation violations as prescribed by OAR 333-061-0078(5).

(E) Additional routine monitoring the month following a total coliform-positive sample. At least three routine samples must be collected during the next month following one or more total coliform-positive samples at water systems prescribed quarterly monitoring. The Authority may waive this requirement if the conditions of subparagraphs (6)(b)(E)(i), (6)(b)(E)(ii), or (6)(b)(E)(iii) of this rule are met. Samples may either be collected at regular time intervals throughout the month or may be collected on a single day if samples are collected at different sites. The results from the analysis of additional routine samples must be used to determine if a coliform investigation trigger was exceeded as specified in OAR 333-061-0078(2).

(i) The Authority may waive the requirement to collect three routine samples as required by paragraph (6)(b)(E) of this rule if the Authority, or a party authorized by the Authority, performs a site visit before the end of the next month in which the system provides water to the public. The site visit must be sufficiently detailed to allow the Authority to determine whether additional monitoring or any corrective action is needed. A representative of the water supplier may not perform

this site visit, even if the representative is a party authorized by the Authority to perform sanitary surveys.

(ii) The Authority may waive the requirement to collect three routine samples as required by paragraph (6)(b)(E) of this rule if the Authority has determined why the sample was total coliform-positive and has established that the water supplier has corrected the problem or will correct the problem before the end of the next month in which the water system serves water to the public. In this case, the Authority must document this decision to waive the following month's additional monitoring requirement in writing, have it approved and signed by an Authority supervisor who recommends such a decision, and make this document available to the EPA and public. The written documentation must describe the specific cause of the total coliform-positive sample and what action the water supplier has taken or will take to correct this problem.

(iii) The Authority will not waive the requirement to collect three additional routine samples the next month in which the system provides water to the public solely on the grounds that all repeat samples are total coliform-negative. If the Authority determines that the water supplier has corrected the contamination problem before the set of repeat samples required by subsection (6)(g) of this rule is collected, and all repeat samples were total coliform-negative, the Authority may waive the requirement for additional routine monitoring the next month.

(c) At community water systems using only groundwater as defined in OAR 333-061-0020(89) serving 1,000 people or less, one sample must be collected for coliform bacteria every month.

(d) At water systems using surface water or GWUDI serving 1,000 people or less, one sample must be collected for coliform bacteria every month.

(e) At public water systems serving more than 1,000 people, the monitoring frequency for total coliform bacteria is based on the population served by the system, as specified in Table 34:

TABLE 34
Total Coliform Monitoring Frequency at
Public Water Systems Serving More Than 1,000 People

Population served	Minimum number of samples per month	Population served	Minimum number of samples per month
1,001 to 2,500	2	70,001 to 83,000	80
2,501 to 3,300	3	83,001 to 96,000	90
3,301 to 4,100	4	96,001 to 130,000	100

4,101 to 4,900	5	130,001 to 220,000	120
4,901 to 5,800	6	220,001 to 320,000	150
5,801 to 6,700	7	320,001 to 450,000	180
6,701 to 7,600	8	450,001 to 600,000	210
7,601 to 8,500	9	600,001 to 780,000	240
8,501 to 12,900	10	780,001 to 970,000	270
12,901 to 17,200	15	970,001 to 1,230,000	300
17,201 to 21,500	20	1,230,001 to 1,520,000	330
21,501 to 25,000	25	1,520,001 to 1,850,000	360
25,001 to 33,000	30	1,850,001 to 2,270,000	390
33,001 to 41,000	40	2,270,001 to 3,020,000	420
41,001 to 50,000	50	3,020,001 to 3,960,000	450
50,001 to 59,000	60	3,960,001 or more	480
59,001 to 70,000	70		

(f) At water systems using surface water or GWUDI without filtration treatment as specified in OAR 333-061-0032(2) and (3), at least one sample must be collected near the first service connection every day the turbidity level measured as specified in OAR 333-061-0036(5)(a)(B) exceeds 1 NTU. The sample must be analyzed for the presence of total coliform bacteria and must be collected within 24 hours of the first exceedance, unless the Authority determines that the water supplier, for logistical reasons beyond its control, cannot have the sample analyzed within 30 hours of collection and identifies an alternative sample collection schedule. Sample results from this coliform monitoring must be included in determining whether a coliform investigation trigger as specified in OAR 333-061-0078(2) was exceeded.

(g) If a sample collected as prescribed by subsections (6)(b) through (6)(f) of this rule is total coliform-positive, a set of repeat samples must be collected within 24 hours of being notified of the positive result. No fewer than three repeat samples must be collected for each total coliform-positive sample found.

(A) The Authority may extend the 24-hour limit on a case-by-case basis if a logistical problem beyond its control prevents a water supplier from collecting the repeat samples within 24 hours.

(B) All repeat samples must be collected on the same day, except that at water systems with only a single service connection the Authority may allow the required set of repeat samples to be collected over a three-day period, or the collection of a larger volume repeat sample(s) in one or more sample containers of any size as long as the total volume collected is at least 300 ml.

(C) An additional set of repeat samples must be collected if one or more repeat samples in the current set of repeat samples is total coliform-positive. The additional set of repeat samples must be collected within

24 hours of being notified of the positive result, unless the Authority extends the limit as specified in paragraph (6)(g)(A) of this rule. Water suppliers must continue to collect additional sets of repeat samples until either total coliforms are not detected in one complete set of repeat samples or the water supplier determines that a coliform investigation trigger as specified in OAR 333-061-0078(2) was exceeded as a result of a repeat sample being total coliform-positive and notifies the Authority. If a trigger identified in OAR 333-061-0078(2) is exceeded as a result of a routine sample being total coliform-positive, water suppliers are required to conduct only one round of repeat monitoring for each total coliform-positive routine sample.

(D) After a water supplier collects a routine sample and before it learns the results of the analysis of that sample, if it collects another routine sample(s) from within five adjacent service connections of the initial sample, and the initial sample, after analysis, is found to be total coliform-positive, then the water supplier may count the subsequent sample(s) as a repeat sample instead of as a routine sample.

(E) Repeat samples collected at a groundwater source

(i) If a repeat sample as specified in this subsection was collected at the location for triggered source water monitoring as specified in paragraph (6)(i)(A) of this rule and is *E. coli*-positive, the MCL for *E. coli* as specified in OAR 333-061-0030(4) was exceeded and the water supplier must also comply with subsection (6)(j) of this rule. If more than one repeat sample is collected at the monitoring location required for triggered source water monitoring, the water supplier may reduce the number of additional source water samples required by subsection (6)(j) of this rule by the number of repeat samples taken at that location that were not *E. coli*-positive.

(ii) If more than one repeat sample is collected at the location for triggered source water monitoring as specified in paragraph (6)(i)(A) of this rule, and more than one repeat sample is *E. coli*-positive, the MCL for *E. coli* was exceeded and the water supplier must also comply with OAR 333-061-0032(6).

(iii) If all repeat samples collected at the location for triggered source water monitoring as specified in paragraph (6)(i)(A) of this rule are *E. coli*-negative and a repeat sample collected at a monitoring location other than one required for triggered source water monitoring is *E. coli*-positive, the MCL for *E. coli* was exceeded, but the water supplier is not required to comply with subsection (6)(j) of this rule.

(h) Sampling for additional pathogens may be required by the Authority when specific evidence indicates the possible presence of such organisms.

(i) Groundwater source sampling requirements:

(A) At least one sample must be collected from every groundwater source for which at least 4-log treatment of viruses is not applied before or at the first customer within 24 hours of notification of a total coliform-positive sample collected as prescribed by subsections (6)(b) through (6)(f) of this rule that is not invalidated according to paragraphs (6)(a)(F) or (G) of this rule.

(i) The sample must be collected from every groundwater source in use at the time the total coliform-positive sample was collected, except as provided by subparagraph (6)(i)(A)(ii) of this rule.

(ii) If approved by the Authority, the sampling required by this subsection may be conducted at a representative groundwater source or sources at water systems with more than one ground water source. If directed by the Authority, water suppliers must request approval of a triggered source water monitoring plan that identifies one or more ground water sources that are representative of each monitoring site in a system's coliform sampling plan according to paragraph (6)(a)(I) of this rule and that the water supplier intends to use for representative sampling under this paragraph.

(iii) The Authority may extend the 24-hour time limit for the collection of samples on a case-by-case basis if the water supplier cannot collect the sample(s) within 24 hours due to circumstances beyond its control. In the case of an extension, the Authority will specify how much time the water supplier has to collect the sample(s).

(iv) A water supplier is not required to comply with the source water monitoring requirements specified in this paragraph if either of the following conditions exists:

(I) The Authority determines, and documents in writing, that the total coliform-positive sample collected as prescribed by subsections (6)(b) through (6)(f) of this rule is caused by a distribution system deficiency; or

(II) The total coliform-positive sample collected as prescribed by subsections (6)(b) through (6)(f) of this rule is collected at a location that meets Authority criteria for distribution system conditions that will cause total coliform-positive samples.

(v) Groundwater source samples required by this subsection must be collected at a location prior to any treatment unless the Authority approves an alternative sampling location. If the water system's configuration does not allow for sampling at the groundwater source, the water system must collect a sample at an Authority-approved location representative of source water quality.

(B) Additional Requirements related to wholesale water systems that use groundwater sources without providing at least 4-log inactivation of viruses for each groundwater source and purchasing water systems.

(i) If a sample collected according to subsections (6)(b) through (6)(f) of this rule at a purchasing water system is total coliform-positive, the water supplier for that purchasing system must notify the water supplier for the wholesale system(s) within 24 hours of being notified of the total coliform-positive sample.

(ii) If the water supplier for a wholesale system receives notice that a sample collected according to subsections (6)(b) through (6)(f) of this rule at a purchasing water system it serves is total coliform-positive, the wholesaler must collect a sample from its groundwater source(s) as prescribed by paragraph (6)(i)(A) of this rule and have it analyzed for *E. coli* within 24 hours of notification.

(iii) If a sample collected according to subparagraph (6)(i)(A) of this rule at a wholesale system is *E. coli*-positive, the water supplier must notify the water supplier(s) for all purchasing water systems served by the groundwater source of the *E. coli*-positive source water sample within 24 hours of being notified of the result. The water supplier for the wholesale system must also meet the requirements of subsection (6)(j) of this rule.

(j) Five additional samples must be collected from the same source within 24 hours of notification of an *E. coli*-positive sample collected as prescribed by paragraph (6)(i)(A) or (6)(k) of this rule at a groundwater source and not invalidated according to subsection (6)(l) of this rule if the Authority does not require corrective action as prescribed by OAR 333-061-0032(6).

(k) At groundwater systems where chlorine, ultraviolet light, or another oxidant is used for disinfection, but where 4-log inactivation of viruses is not achieved, assessment monitoring must be conducted at the groundwater source to determine the potential for viral contamination.

(A) Assessment monitoring according to this subsection must include the collection of at least one sample from each groundwater source every year. The Authority may grant written approval to conduct monitoring

at one or more representative groundwater sources within a water system that draw water from the same hydrogeologic setting.

(B) A sample collected according to paragraph (6)(i)(A) of this rule or a sample collected for GWUDI determination according to OAR 333-061-0032(8) may be used to meet the requirements of this subsection.

(C) Additional Source Water Assessment Monitoring

(i) The Authority may require additional source water assessment monitoring if at least one of the following conditions occur:

(I) At least one total coliform-positive sample was collected from the groundwater source;

(II) A groundwater source having been determined by the Authority to be susceptible to fecal contamination through a Source Water Assessment (or equivalent hydrogeologic assessment wherein susceptibility is defined as a result of a highly sensitive source due to aquifer characteristics, vadose zone characteristics, monitoring history, or well construction) and the presence of a fecal contaminant source within the two-year time-of-travel zone, outreach area, or zone one area;

(III) A source that draws water from an aquifer that the Authority has identified as being fecally contaminated;

(IV) A determination by a source water assessment or equivalent hydrogeologic analysis that the groundwater source is highly sensitive, and that the source is located within an area that has a high density of underground injection control wells; or

(V) Other criteria at the discretion of the Authority.

(ii) Requirements for additional source water assessment monitoring include, but are not limited to:

(I) Collecting 12 consecutive monthly groundwater source samples for water systems that operate year-round, or monthly samples that represent each month the water system provides groundwater to the public for water systems that operate seasonally;

(II) Collecting a standard sample volume of at least 100 mL for *E. coli* analysis regardless of the analytical method used;

(III) Analysis of all samples for the presence of *E. coli*, using an analytical method as prescribed by section (1) of this rule;

(IV) Collecting samples at a location prior to any treatment unless the Authority approves a sampling location after treatment; and

(V) Collecting samples at the groundwater source, unless the water system's configuration does not allow for raw water sampling and the Authority approves an alternate sampling location that is representative of the water quality of that groundwater source.

(D) The Authority may require a groundwater source to be re-evaluated as prescribed by this subsection if geologic conditions, source pumping conditions, or fecal contaminant source conditions change over time.

(l) The Authority may invalidate an *E. coli*-positive groundwater source sample collected according to subsections (6)(i), (j) or (k) of this rule only under the following conditions:

(A) The water supplier or laboratory notifies the Authority in writing that improper sample analysis occurred; or

(B) The Authority determines and documents in writing that there is substantial evidence that an *E. coli* -positive sample is not related to source water quality.

(m) If the Authority invalidates an *E. coli* -positive groundwater source sample according to subsection (6)(l) of this rule, the water supplier must collect another source water sample as prescribed by subsection (6)(i) of this rule within 24 hours of being notified of the invalidation. The Authority may extend the 24-hour time limit on a case-by-case basis if the system cannot collect the source water sample within 24 hours due to circumstances beyond its control. In the case of an extension, the Authority must specify how much time the system has to collect the sample.

(n) The Authority may direct a water supplier to conduct source water assessment monitoring as prescribed by subsection (6)(k) of this rule when a new groundwater source is placed into service. Monitoring as prescribed by this subsection must begin before the groundwater source is used to provide water to the public.

(o) The Authority may require a water supplier to provide any existing information that will enable the Authority to perform an assessment to determine whether the groundwater system obtains water from a hydrogeologically sensitive aquifer.

(p) Monitoring violations.

(A) Failure to collect every required routine or additional routine sample in a compliance period is a violation of this rule.

(B) Failure to analyze for *E. coli* following a total coliform-positive routine sample is a violation of this rule.

(q) Every water system must undergo a sanitary survey at least every five years at a frequency determined by the authority. The Authority will review the results of each survey to determine whether the existing monitoring frequency is adequate and what additional measures, if any, the water supplier needs to undertake to improve drinking water quality.

(r) For any samples collected or analyzed for coliform bacteria on March 31, 2016 or earlier or for any repeat samples collected or analyzed for coliform bacteria after March 31, 2016 in response to a positive sample collected on March 31, 2016 or earlier, the provisions of 40 CFR 141.21(b), (c), (e), (f) and (g) apply to processing and analysis of that sample.

(7) Radionuclides:

(a) Gross alpha particle activity, Radium 226, Radium 228, and Uranium:

(A) Initial Monitoring. Community Water Systems without acceptable historical data, as defined below, must conduct initial monitoring to determine compliance with OAR 333-061-0030(5) by December 31, 2007.

(i) Samples must be collected from each entry point to the distribution system during 4 consecutive quarters before December 31, 2007 according to the following schedule:

Population —	Begin initial monitoring - Complete initial monitoring by
300 or More —	First quarter 2005 — Fourth quarter 2005
100-299 —	First quarter 2006 — Fourth quarter 2006
Less than 100 —	First quarter 2007 — Fourth quarter 2007

(ii) New systems or systems using a new source must conduct initial monitoring beginning the first quarter of operation, followed by three consecutive quarterly samples.

(iii) The Authority may waive the final two quarters of the initial monitoring at an entry point if the results of the samples from the first two quarters are below the method detection limit.

(iv) Grandparenting of historical data. A system may use monitoring data from each source or entry point collected between June 2000 and December 8, 2003 to satisfy the initial monitoring requirements.

(v) If the average of the initial monitoring results for a sampling point is above the MCL, the system must collect and analyze quarterly samples at the entry point until the system has results from four consecutive quarters that are at or below the MCL, unless the system enters into another schedule as part of a formal compliance agreement with the Authority.

(B) Reduced Monitoring. Radionuclide monitoring may be reduced to once every three years, once every six years, or once every nine years based on the following criteria:

(i) If the average of the initial monitoring result for each contaminant (gross alpha particle activity, radium-226, radium-228, and uranium) at a given entry point is below the detection limit, sampling for that contaminant may be reduced to once every nine years.

(ii) For gross alpha particle activity, combined radium 226 and radium 228, and uranium, if the average of the initial monitoring results is at or above the detection limit but at or below one-half the MCL, sampling for that contaminant may be reduced to once every six years.

(iii) For gross alpha particle activity, combined radium 226 and radium 228, and uranium, if the average of the initial monitoring results is above one-half the MCL but at or below the MCL, the system must collect one sample at that sampling point at least once every three years.

(iv) Systems must use the samples collected during the reduced monitoring period to determine the monitoring frequency for subsequent monitoring periods.

(v) If a system has a monitoring result that exceeds the MCL while on reduced monitoring, the system must collect and analyze quarterly samples at that entry point until the system has results from four consecutive quarters that are below the MCL, unless the system enters into another schedule as part of a formal compliance agreement with the Authority.

(vi) A water system with two or more wells that have been determined to constitute a "wellfield" as specified in subsection (1)(k) of this rule may reduce sampling to only those entry point(s) designated by the Authority.

(C) Compositing of samples. A system may composite up to four consecutive quarterly samples from a single entry point if the analysis is done within a year of the first sample. If the analytical result from the composited sample is greater than one-half the MCL, the Authority may direct the system to take additional quarterly samples before allowing the system to sample under a reduced monitoring schedule.

(D) Substitution of results.

(i) A gross alpha particle activity measurement may be substituted for the required radium-226 measurement if the gross alpha particle activity does not exceed 5 pCi/L.

(ii) A gross alpha particle activity measurement may be substituted for the required uranium measurement if the gross alpha particle activity does not exceed 15 pCi/L.

(iii) The gross alpha measurement shall have a confidence interval of 95 percent (1.65 where one-half is the standard deviation of the net counting rate of the sample) for radium-226 and uranium.

(iv) When a system uses a gross alpha particle activity measurement in lieu of a radium-226 or uranium measurement, the gross alpha particle activity analytical result will be used to determine the future monitoring frequency for radium-226 or uranium. If the gross alpha particle activity result is less than detection, half the method detection limit will be used to determine compliance and the future monitoring frequency.

(b) Beta particle and photon radioactivity:

(A) Community water systems designated by the Authority as "vulnerable" must sample for beta particle and photon radioactivity as follows. No waivers shall be granted:

(i) Initial samples must be collected by December 31, 2007.

(ii) Quarterly samples for beta emitters and annual samples for tritium and strontium-90 must be taken at each entry point to the distribution system. Systems already designated by the state must continue to sample until the state removes the designation.

(iii) If the gross beta particle activity minus the naturally occurring potassium-40 beta particle activity at a sample point has a running annual average less than or equal to 50 pCi/l , sampling for contaminants prescribed in subparagraph (7)(b)(A)(i) of this rule maybe reduced to once every three years.

(B) Community water systems designated by the Authority as "contaminated" by effluents from nuclear facilities and must sample for beta particle and photon radioactivity as follows. No waivers shall be granted.

(i) Systems must collect quarterly samples for beta emitters as detailed below and iodine-131 and annual samples for tritium and strontium-90 at each entry point to the distribution system. Sampling must continue until the Authority removes the designation.

(ii) Quarterly monitoring for gross beta particle activity is based on the analysis of monthly samples or the analysis of a composite of three monthly samples.

(iii) For iodine-131, a composite of five consecutive daily samples shall be analyzed once each quarter. More frequent monitoring may be required if iodine-131 is detected.

(iv) Annual monitoring for strontium-90 and tritium shall be conducted by means of the analysis of a composite of four consecutive quarterly samples or analysis of four quarterly samples.

(v) If the gross beta particle activity minus the naturally occurring potassium-40 beta particle activity at an entry point has a running annual average less than or equal to 15 pCi/l, the Authority may reduce the frequency of monitoring for contaminants prescribed in subparagraph (7)(b)(B)(i) of this rule at that entry point to every three years.

(C) For systems in the vicinity of a nuclear facility, the Authority may allow the substitution of appropriate environmental surveillance data taken in conjunction with operation of a nuclear facility for direct monitoring of man-made radioactivity by the water supplier where such data is applicable to a particular Community water system. In the event of a release, monitoring must be done at the water system's entry points.

(D) Systems may analyze for naturally occurring potassium-40 beta particle activity from the same or equivalent sample used for the gross beta particle activity analysis. Systems are allowed to subtract the potassium-40 beta particle activity value from the total gross beta particle activity value to determine if the screening level is exceeded. The potassium-40 beta particle activity must be calculated by multiplying elemental potassium concentrations (in mg/l) by a factor of 0.82.

(E) If the gross beta particle activity minus the naturally occurring potassium-40 beta particle activity exceeds the screening level, an analysis of the sample must be performed to identify the major radioactive constituents present in the sample and the appropriate doses must be calculated and summed to determine compliance with OAR 333-061-0030(5). Doses must also be calculated and combined for measured levels of tritium and strontium to determine compliance.

(F) Systems must monitor monthly at the entry point(s) which exceed the MCL listed in OAR 333-061-0030(5) beginning the month after the exceedance occurs. Systems must continue monthly monitoring until the system has established, by a rolling average of three monthly samples, that the MCL is being met. Systems who establish that the MCL is being met must return to quarterly monitoring until they meet

the requirements set forth in subparagraph (7)(b)(A)(ii) or (7)(b)(B)(v) of this rule.

(c) General monitoring and compliance requirements for radionuclides.

(A) The Authority may require more frequent monitoring than specified in subsections (7)(a) and (b) of this rule, or may require confirmation samples at its discretion. The results of the initial and confirmation samples will be averaged for use in compliance determinations.

(B) Each system shall monitor at the time designated by the Authority during each compliance period. To determine compliance with 333-061-0030(5), averages of data shall be used and shall be rounded to the same number of significant figures as the MCL of the contaminant in question.

(C) Compliance.

(i) For systems monitoring more than once per year, compliance with the MCL is determined by a running annual average at each sampling point. If the average of any sampling point is greater than the MCL, then the system is out of compliance with the MCL.

(ii) For systems monitoring more than once per year, if any sample result will cause the running average to exceed the MCL at any entry point, the system is out of compliance with the MCL immediately.

(iii) Systems must include all samples taken and analyzed under the provisions of this section in determining compliance, even if that number is greater than the minimum required.

(iv) If a system does not collect all required samples when compliance is based on a running annual average of quarterly samples, compliance will be based on the running average of the samples collected.

(v) If a sample is less than the detection limit, zero will be used to calculate the annual average, unless a gross alpha particle activity is being used in lieu of radium-226 or uranium. In that case, if the gross alpha particle activity result is less than detection, one-half the detection limit will be used to calculate the annual average.

(D) The Authority has the discretion to delete results of obvious sampling or analytical errors.

(E) When the average annual maximum contaminant level for radionuclides as specified in Table 5 is exceeded, the water supplier shall, within 48 hours, report the analysis results to the Authority as prescribed in OAR 333-061-0040 and initiate the public notification procedures prescribed in 333-061-0042(2)(b)(A).

(8) Secondary contaminants:

(a) The levels listed in Table 6 of OAR 333-061-0030 represent reasonable goals for drinking water quality, but routine sampling for these secondary contaminants is not required.

(b) The Authority may however, require sampling and analysis under the following circumstances:

(A) User complaints of taste, odor or staining of plumbing fixtures.

(B) Where treatment of the water is proposed and the levels of secondary contaminants are needed to determine the method and degree of treatment.

(C) Where levels of secondary contaminants are determined by the Authority to present an unreasonable risk to health.

(c) If the results of the analyses do not exceed levels for secondary contaminants, listed in Table 6 of OAR 333-061-0030, subsequent sampling and analysis shall be at the discretion of the Authority.

(d) If the results of the analyses indicate that the levels for secondary contaminants, listed in Table 6 of OAR 333-061-0030 are exceeded, the Authority shall determine whether the contaminant levels pose an unreasonable risk to health or interfere with the ability of a water treatment facility to produce a quality of water complying with the Maximum Contaminant Levels of these rules and specify follow-up actions to be taken.

(e) During the period while any measures called for in subsection (8)(d) of this rule are being implemented, the water supplier shall follow the procedures relating to variances and permits which are prescribed in OAR 333-061-0045.

(9) Monitoring of disinfectant residuals in the distribution system

(a) All public water systems that add a disinfectant to the water supply at any point in the treatment process, or deliver water in which a disinfectant has been added to the water supply, must maintain a detectable disinfectant residual throughout the distribution system and shall measure and record the residual:

(A) At one or more representative points at a frequency that is sufficient to detect variations in chlorine demand and changes in water flow but in no case less often than twice per week; and

(B) At the same points in the distribution system and at the same times as total coliforms are sampled as prescribed by subsections (6)(b) through (6)(f) of this rule.

(b) The Authority may allow a water supplier to collect disinfectant residual samples as specified in paragraph (9)(a)(B) of this rule at points other than the total coliform sampling points at public water systems which use both a surface water source or GWUDI source and a groundwater source, if the Authority determines that such points are more representative of treated

(disinfected) water quality within the distribution system. At water systems where surface water or GWUDI is used, the results of residual disinfectant concentration sampling conducted as prescribed by subsection (5)(a) of this rule for unfiltered systems or subsection (5)(b) of this rule for systems which filter, may be used in lieu of collecting separate samples.

(c) All public water systems that add chlorine for any purpose must ensure that the chlorine residual entering the distribution system after treatment is less than 4.0 mg/l.

(d) The Authority may waive the monitoring requirements specified in subsection (9)(a) of this rule for water systems that add chlorine for purposes such as the oxidation of metals or taste and odor control if a water system measures and records the residual daily and verifies that there is no remaining disinfectant residual at or before the first customer.

(e) Where chlorine is used as the disinfectant, the measurement of residual chlorine shall be by the DPD or other EPA-approved method in accordance with Standard Methods for the Examination of Water and Waste-water, and shall measure the free chlorine residual or total chlorine residual as applicable;

(f) The water supplier shall maintain a summary report of the residual disinfectant measurements and shall retain this summary report at a convenient location within or near the area served by the water system.

Stat. Auth.: ORS 448.131
Stats. Implemented: ORS 448.131, 448.150

333-061-0040
Reporting and Record Keeping

(1) Reporting requirements:

(a) Any person who has reason to believe that his or her actions have led to contamination of a public water system shall report that fact immediately to the water supplier and the Authority.

(b) Laboratory Reporting

(A) Analyses required by OAR 333-061-0036 and performed by an accredited laboratory as defined in OAR 333-061-0036(1)(b) must be reported on a form produced by the accredited laboratory. The laboratory analysis report must be submitted to the Authority within 10 days of the end of the month, or within 10 days of the end of the required monitoring period.

(B) Mandatory reporting requirements for primary laboratories as defined in OAR 333-061-0036(1)(b)(A). These laboratories must:

(i) Validate the results of any sample analysis and report that analysis directly to the Authority and to the water supplier within 48 hours or two business days of completing the analytical run if the samples analysis:

(I) Exceeds the MCL for nitrate as specified in OAR 333-061-0030(1); or

(II) Is positive for coliform bacteria.

(ii) Report any sample analysis directly to the Authority and to the water supplier within 24 hours or on the next business day after validating a sample result that exceeds the MCL for any chemical analyte specified in OAR 333-061-0030 other than nitrate.

(iii) Report any sample analysis directly to the Authority and to the water supplier within 24 hours or on the next business day after obtaining a sample result from a subcontracted laboratory, if the sample analysis:

(I) Exceeds the MCL for nitrate as specified in OAR 333-061-0030(1) or is positive for coliform bacteria; or

(II) Exceeds the MCL for any chemical analyte specified in OAR 333-061-0030 other than nitrate upon validating the sample analysis.

(C) Mandatory reporting requirements for subcontracted laboratories as defined in OAR 333-061-0036(1)(b)(B). These laboratories must:

(i) Validate the results of any sample analysis and report that analysis to their client laboratory within 48 hours or two business days of completing the analytical run if the analysis:

(I) Exceeds the MCL for nitrate as specified in OAR 333-061-0030(1); or

(II) Is positive for coliform bacteria.

(ii) Report any sample analysis to their client laboratory within 24 hours or on the next business day after validating a sample result that exceeds the MCL for any chemical analyte specified in OAR 333-061-0030 other than nitrate.

(c) Water suppliers must report the following events to the Authority within 24 hours or sooner as prescribed in this subsection.

(A) The detection of any substance or pathogenic organisms in the water that has caused or is likely to cause physical suffering or illness.

(B) An exceedance of the MCL for *E. coli*, which must be reported to the Authority by the end of the day when the water supplier learns of the exceedance and which must be followed by public notice according to OAR 333-061-0042.

(C) Notification of an *E. coli*-positive routine sample, which must be reported to the Authority according to by the end of the day when the water supplier learns of the result, unless the water supplier is notified of the result after the Authority office is closed, in which case the

water supplier must notify the Authority before the end of the next business day.

(D) Violation of a coliform investigation requirement as specified in OAR 333-061-0078(5), which must be followed by public notice according to OAR 333-061-0042.

(d) The water supplier using a surface water source or a groundwater source under direct influence of surface water which provides filtration treatment shall report monthly beginning June 29, 1993 or when filtration is installed, whichever is later, to the Authority the results of any test, measurement or analysis required by OAR 333-061-0036(5)(b) of these rules within 10 days after the end of the month.

(A) All systems using surface water or groundwater under the direct influence of surface water shall consult with the Authority within 24 hours, after learning:

(i) That the turbidity exceeded 5 NTU;

(ii) Of a waterborne disease outbreak potentially attributable to that water system;

(iii) That the disinfectant residual concentration in the water entering the distribution system fell below 0.2 mg/l and whether or not the residual was restored to at least 0.2 mg/l within four hours.

(B) In addition to the reporting and recordkeeping requirements in paragraph (1)(d)(A) of this rule, a public water system which provides conventional filtration treatment or direct filtration serving at least 10,000 people must report monthly to the Authority the information specified in subparagraphs (1)(d)(B)(i) and (ii) of this rule. Public water systems which provide filtration treatment other than conventional filtration treatment, direct filtration, slow sand filtration, and diatomaceous earth filtration, regardless of population served, must also meet the requirements of paragraph (1)(d)(A) of this rule and must report monthly to the Authority the information specified in subparagraph (1)(d)(B)(i) of this rule.

(i) Turbidity measurements as required by OAR 333-061-0036(5) must be reported within 10 days after the end of each month the system serves water to the public. Information that must be reported includes:

(I) The total number of filtered water turbidity measurements taken during the month;

(II) The number and percentage of filtered water turbidity measurements taken during the month which are less than or equal to the turbidity limits specified by OAR 333-061-0030(3)(b)(A) through (D);

(III) The date and value of any turbidity measurements taken during the month which exceed 1 NTU for systems using conventional filtration treatment or direct filtration, or which exceed the maximum level set by the Authority specified in OAR 333-061-0030(3)(b)(D).

(IV) The date and value of any turbidity measurements taken during the month which exceed 5 NTU for systems using slow sand filtration or diatomaceous earth filtration.

(ii) Water systems must maintain the results of individual filter monitoring for at least three years. Water systems must report that they have conducted individual filter turbidity monitoring within 10 days after the end of each month the system serves water to the public. Water systems must also report individual filter turbidity measurement results within 10 days after the end of each month the system serves water to the public only if measurements demonstrate one or more of the conditions in subparagraphs (1)(d)(B)(ii)(I) through (IV) of this rule. Water systems that use lime softening may apply to the Authority for alternative exceedance levels for the levels specified in subparagraphs (1)(d)(B)(ii)(I) through (IV) of this rule if the water system can demonstrate that higher turbidity levels in individual filters are due to lime carryover only and not due to degraded filter performance.

(I) For any individual filter that has a measured turbidity level of greater than 1.0 NTU in two consecutive measurements taken 15 minutes apart, the water system must report the filter number, the turbidity measurement, and the date(s) on which the exceedance occurred. In addition, the water system must either produce a filter profile for the filter within seven days of the exceedance (if the water system is not able to identify an obvious reason for the abnormal filter performance) and report that the profile has been produced or report the obvious reason for the exceedance.

(II) For any individual filter that has a measured turbidity level of greater than 0.5 NTU in two consecutive measurements taken 15 minutes apart at the end of the first four hours of continuous filter operation after the filter has been backwashed or otherwise taken offline, the system must report the filter number, the turbidity, and the date(s) on which the exceedance occurred. In addition, the system must either produce a filter profile

for the filter within seven days of the exceedance (if the system is not able to identify an obvious reason for the abnormal filter performance) and report that the profile has been produced or report the obvious reason for the exceedance.

(III) For any individual filter that has a measured turbidity level of greater than 1.0 NTU in two consecutive measurements taken 15 minutes apart at any time in each of three consecutive months, the water system must report the filter number, the turbidity measurement, and the date(s) on which the exceedance occurred. In addition, the water system must conduct a self-assessment of the filter within 14 days of the exceedance and report that the self-assessment was conducted. The self assessment must consist of at least the following components: assessment of filter performance; development of a filter profile; identification and prioritization of factors limiting filter performance; assessment of the applicability of corrections; and preparation of a filter self-assessment report.

(IV) For any individual filter that has a measured turbidity level of greater than 2.0 NTU in two consecutive measurements taken 15 minutes apart at any time in each of two consecutive months, the water system must report the filter number, the turbidity measurement, and the date(s) on which the exceedance occurred. In addition, the water system must arrange to have a comprehensive performance evaluation by the Authority or a third party approved by the Authority conducted no later than 30 days following the exceedance and have the evaluation completed and submitted to the Authority no later than 90 days following the exceedance.

(iii) If at any time the turbidity exceeds 1 NTU in representative samples of filtered water in a system using conventional filtration treatment or direct filtration, the system must inform the Authority as soon as possible, but no later than the end of the next business day.

(iv) If at any time the turbidity in representative samples of filtered water exceed the maximum level set by the Authority as specified in OAR 333-061-0030(3)(b)(D) for filtration technologies other than conventional filtration treatment, direct filtration, slow sand filtration, or diatomaceous earth filtration,

the water system must inform the Authority as soon as possible, but no later than the end of the next business day.

(C) In addition to the reporting and recordkeeping requirements in paragraph (1)(d)(A) of this rule, a public water system which provides conventional filtration treatment or direct filtration treatment serving less than 10,000 people must report monthly to the Authority the information specified in subparagraphs (1)(d)(B)(i) of this rule and beginning January 1, 2005 the information specified in subparagraph(1)(d)(C)(i) of this rule. Public water systems which provide filtration treatment other than conventional filtration treatment, direct filtration, slow sand filtration, and diatomaceous earth filtration regardless of population served must also meet the requirements of paragraph (1)(d)(A) of this rule and must report monthly to the Authority the information specified in subparagraph (1)(d)(B)(i) of this rule.

(i) Water systems must maintain the results of individual filter monitoring for at least three years. Water systems must report that they have conducted individual filter turbidity monitoring within 10 days after the end of each month the system serves water to the public. Water systems must also report individual filter turbidity measurement results within 10 days after the end of each month the system serves water to the public only if measurements demonstrate one or more of the conditions in subparagraphs (1)(d)(C)(i)(I) through (III) of this rule. Water systems that use lime softening may apply to the Authority for alternative exceedance levels for the levels specified in subparagraphs (1)(d)(C)(i)(I) through (III) of this rule if the water system can demonstrate that higher turbidity levels in individual filters are due to lime carryover only and not due to degraded filter performance.

(I) If the turbidity of an individual filter (or the turbidity of the combined filter effluent (CFE) for systems with two or less filters that monitor CFE in lieu of individual filter monitoring) is greater than 1.0 NTU in two consecutive measurements taken 15 minutes apart, the water system must report to the Authority by the 10th day of the following month the filter number(s), the turbidity value(s) that exceeded 1.0 NTU, the corresponding date(s) of occurrence, and the cause (if known) for the elevated turbidity values. The Authority may request the water system produce a turbidity profile for the filter(s) in question.

(II) If the turbidity of an individual filter (or the turbidity of the combined filter effluent (CFE) for systems with two or less filters that monitor CFE in lieu of individual filter monitoring) is greater than 1.0 NTU in two consecutive measurements taken 15 minutes apart for three consecutive months, the water system must conduct a filter self-assessment within 14 days of the date the turbidity exceeded 1.0 NTU during the third month, unless a CPE is performed in lieu of a filter self-assessment. Systems with two filters monitoring the CFE must conduct a filter self-assessment for both filters. The self-assessment must consist of the following components: assessment of filter performance; development of a filter profile; identification and prioritization of factors limiting filter performance; assessment of the applicability of corrections; and preparation of a filter self-assessment report. When a self-assessment is required, the water system must report the date the self-assessment was triggered, the date the self-assessment was completed, and the conclusion(s) of the self-assessment by the 10th of the following month or 14 days after the self-assessment was triggered only if the self-assessment was triggered during the last four days of the month.

(III) If the turbidity of an individual filter (or the turbidity of the combined filter effluent (CFE) for systems with two or less filters that monitor CFE in lieu of individual filter monitoring) is greater than 2.0 NTU in two consecutive measurements taken 15 minutes apart for two consecutive months, the water system must report these turbidity results to the Authority by the 10th of the following month and arrange to have a comprehensive performance evaluation (CPE) by the Authority or a third party approved by the Authority conducted within 60 days of the date the turbidity exceeded 2.0 NTU during the second month. The CPE report must be submitted to the Authority no later than 120 days following the date the turbidity exceeded 2.0 NTU during the second month. A CPE is not needed if the Authority or approved third party has conducted a CPE within the last 12 months or the Authority and the water system are jointly participating in an on-going Comprehensive Technical

Assistance (CTA) project as part of the Composite Correction Program with the water system. When a CPE is required, the water system must report that a CPE is required and the date that the CPE was triggered by the 10th day of the following month.

(e) The water supplier for water systems using a surface water source or a groundwater source under direct influence of a surface source which does not provide filtration treatment shall report according to subsection (1)(d) of this rule in addition to the requirements of this subsection. Monthly reporting to the Authority will begin January 1, 1991 for systems using surface water sources and January 1, 1991 or six months after the Authority determines surface influence for systems using groundwater under the direct influence of surface water.

(A) Report to the Authority within 10 days after the end of each month, the results or analysis of:

(i) Fecal coliform or total coliform bacteria test results on raw (untreated) source water.

(ii) Daily disinfection "CT" values including parameters such as pH measurements, temperature, and disinfectant residuals at the first customer used to compute the "CT" values.

(iii) Daily determinations using the "CT" values of the adequacy of disinfectant available for inactivation of *Giardia lamblia* or viruses as specified in OAR 333-061-0032(1)(a).

(B) Report to the Authority within 10 days after the end of each Federal Fiscal year (September 30), the results of:

(i) The watershed control program requirements as specified in OAR 333-061-0032(2)(b)(B).

(ii) The on-site inspection summary requirements as specified in OAR 333-061-0032(2)(b)(C).

(f) Special reporting requirements for groundwater systems.

(A) Groundwater systems conducting compliance monitoring in accordance with OAR 333-061-0032(7)(b) must notify the Authority any time the water system fails to meet any Authority-specified operating requirements including, but not limited to, minimum residual disinfectant concentration, membrane operating criteria or membrane integrity, and alternative treatment operating criteria, if operation in accordance with the specified criteria is not restored within four hours. The groundwater system must notify the Authority as soon as possible, but in no case later than the end of the next business day.

(B) A groundwater system must notify the Authority within 30 days of completing any corrective action as prescribed by OAR 333-061-0032(6).

(C) A groundwater system subject to the requirements of OAR 333-061-0036(6)(i) must provide documentation to the Authority within 30 days that a total coliform-positive sample met Authority criteria for exceptions to triggered source water monitoring requirements because the total coliform-positive sample was attributed to distribution system conditions.

(D) A groundwater system conducting compliance monitoring as prescribed by OAR 333-061-0032(7)(b) must report the results of daily residual disinfectant concentration measurements at the entry point within 10 days after the end of each month.

(g) All Community and Non-Transient Non-Community public water systems shall report all of the following information pertaining to lead and copper to the Authority in accordance with the requirements of this subsection.

(A) Except as provided in subparagraph (1)(h)(A)(vii) of this rule, a public water system shall report the information below for all tap water samples and for all water quality parameter samples within 10 days following the end of each applicable monitoring period. For monitoring periods with a duration less than six-months, the end of the monitoring period is the last date samples can be collected during that period.

(i) The results of all tap samples for lead and copper including the location of each site and the criteria under which the site was selected for the system's sampling pool. With the exception of initial tap sampling, the system shall designate any site which was not sampled during previous monitoring periods, and include an explanation of why sampling sites have changed. By the applicable date specified in OAR 333-061-0036(2)(c)(D)(i) for commencement of initial monitoring, each Community Water System which does not complete its targeted sampling pool meeting the criteria for tier 1 sampling sites shall send a letter to the Authority justifying its selection of tier 2 or tier 3 sampling sites. By the applicable date specified in OAR 333-061-0036(2)(c)(D)(i) for commencement of initial monitoring, each Non-Transient Non-Community water system which does not complete its sampling pool meeting the criteria for tier 1 sampling sites shall send a letter to the Authority justifying its selection of sampling sites.

(ii) A certification that each first draw sample collected by the water system is one-liter in volume and, to the best of their

knowledge, has stood motionless in the service line, or in the interior plumbing of a sampling site, for at least six hours. Where residents collected samples, a certification that each tap sample collected by the residents was taken after the water system informed them of proper sampling procedures according to OAR 333-061-0036(2)(c)(B)(ii).

(iii) The results of all tap samples for pH, and where applicable, alkalinity, calcium, conductivity, temperature, and orthophosphate or silica, and the results of all samples collected at the entry point(s) to the distribution system for applicable water quality parameters according to OAR 333-061-0036(2)(c)(F)(iii) through (vi).

(iv) Each water system that requests that the Authority reduce the number and frequency of sampling shall provide the information required in OAR 333-061-0036(2)(c)(D)(iv).

(v) Documentation for each tap water lead and copper sample for which the water system requests invalidation.

(vi) The 90th percentile lead and copper tap water samples collected during each monitoring period.

(vii) A water system shall report the results of all water quality parameter samples collected for follow-up tap monitoring prescribed in OAR 333-061-0036(2)(c)(F)(iv) through (vii) during each six-month monitoring period within 10 days following the end of the monitoring period unless the Authority specifies a more frequent monitoring requirement.

(B) A water system shall report the sampling results for all source water samples collected for lead and copper within the first 10 days following the end of each source water monitoring period according to OAR 333-061-0036(2)(c)(G). With the exception of the first round of source water sampling, the system shall specify any site which was not sampled during previous monitoring periods, and include an explanation of why the sampling point has changed.

(C) Corrosion control treatment reporting requirements. By the applicable dates according to OAR 333-061-0034(2)(a) through (e), systems shall report the following information: for systems demonstrating that they have already optimized corrosion control, the information required in OAR 333-061-0034(2)(d)(B) or (C); for systems required to optimize corrosion control, their recommendation regarding optimal corrosion control treatment according to OAR 333-061-0034(3)(a); for systems required to evaluate the effectiveness of corrosion control treatments, the information required in OAR 333-061-0034(3)(c) of these rules; for systems required to install optimal

corrosion control designated by the Authority according to OAR 333-061-0034(3)(i), a letter certifying that the system has completed the installation.

(D) Source water treatment reporting requirements. By the applicable dates according to OAR 333-061-0034(4)(a), systems shall report the following information to the Authority: the system's recommendation regarding source water treatment if required according to OAR 333-061-0034(4)(b)(A); for systems required to install source water treatment according to OAR 333-061-0034(4)(b)(B), a letter certifying that the system has completed the installation of the treatment designated by the Authority within 24 months after the Authority designated the treatment.

(E) Public education program reporting requirements.

(i) Any water system that is subject to the public education requirements in OAR 333-061-0034(5) shall, within 10 days after the end of each period in which the system is required to perform public education tasks in accordance with OAR 333-061-0034(5)(c), send written documentation to the Authority that contains:

(I) A demonstration that the system has delivered the public education materials that meet the content and delivery requirements specified in OAR 333-061-0034(5)(a) through (c); and

(II) A list of all the newspapers, radio stations, television stations, and facilities and organizations to which the system delivered public education materials during the period in which the system was required to perform public education tasks.

(ii) Unless required by the Authority, a system that previously has submitted the information in subparagraph (1)(g)(E)(i)(II) of this rule need not resubmit the information, as long as there have been no changes in the distribution list and the system certifies that the public education materials were distributed to the same list submitted previously.

(iii) No later than three months following the end of the monitoring period, each system must mail a sample copy of the consumer notification of tap results to the Authority along with a certification that the notification has been distributed in a manner consistent with the requirements of OAR 333-061-0034(5)(e).

(F) Any system which collects sampling data in addition to that required by this subsection shall report the results to the Authority within the

first 10 days following the end of the applicable monitoring period under OAR 333-061-0036(2)(c)(A) through (H) during which the samples are collected.

(G) At a time specified by the Authority prior to the addition of a new source or any long-term change in water treatment, a water system deemed to have optimized corrosion control, or is subject to reduced monitoring, shall submit written documentation to the Authority describing the change or addition. The Authority must review and approve the addition or change before it is implemented by the water system.

(H) Each ground water system that limits water quality parameter monitoring to a subset of entry points shall provide written correspondence to the Authority that identifies the selected entry points and includes information sufficient to demonstrate that the sites are representative of water quality and treatment conditions throughout the system. This correspondence must be submitted to the Authority prior to commencement of such monitoring.

(h) The water supplier shall report to the Authority the results of any test, measurement or analysis required by these rules that is performed on site (for example, supplemental fluoride) by trained personnel within 10 days after the end of the month, except that reports which indicate that fluoride levels exceed 4.0 mg/l shall be reported within 48 hours:

(i) The water supplier shall submit to the Authority within 10 days after completing any public notification action as prescribed in OAR 333-061-0042 a representative copy of each type of notice distributed to the water users or made available to the public and the media along with certification that the system has fully complied with the distribution and public notification requirements.

(j) Water systems required to sample for the contaminants listed in OAR 333-061-0036(4)(c) through (4)(e) or (4)(g) through (4)(k) must report the information listed in Tables 35 through 37 to the Authority. Water systems monitoring quarterly or more frequently must report to the Authority within 10 days after the end of each quarter in which samples were collected. Water systems required to sample less frequently than quarterly must report to the Authority within 10 days after the end of each monitoring period in which samples were collected. Water systems are required to submit the information listed in Tables 35 through 37, within 10 days of the end of any quarter in which monitoring is required.

(A) Disinfection byproducts. Water systems must report the information specified in Table 35 as follows:

Table 35

Water systems which	Must report [1]
Monitor for TTHM and HAA5 in accordance with OAR 333-061-0036(4)(c)(A) or (4)(d).	The number of samples taken during the last quarter; The date and results of each sample taken during the last quarter; The arithmetic average of quarterly results for the last four quarters for each monitoring location (LRAA), beginning at the end of the fourth calendar quarter that follows the compliance date and at the end of each subsequent quarter; If the LRAA calculated based on fewer than four quarters of data would cause the MCL to be exceeded regardless of the monitoring results of subsequent quarters; Whether the MCL was violated at any monitoring location; and Any operational evaluation levels that were exceeded during the quarter and, if so, the location, date, and calculated TTHM and HAA5 levels.
Monitor for chlorite as required by OAR 333-061-0036(4)(g).	The number of entry point samples taken each month for the last 3 months; The location, date, and result of each sample both entry point and distribution system taken during the last quarter; For each month in the reporting period, the arithmetic average of all samples taken in each of the three sample sets taken in the distribution system; and Whether the MCL was violated as determined in OAR 333-061-0036(4)(g) including which month and how many times it was violated each month.
Monitor for bromate as required by OAR 333-061-0036(4)(h).	The number of samples taken during the last quarter; The location, date, and result of each sample taken during the last quarter; The arithmetic average of the monthly arithmetic averages of all samples taken in the last year; Whether the MCL was violated as determined in OAR 333-061-0036(4)(h).

[1]The Authority may choose to perform calculations and determine whether the MCL was violated, in lieu of having the system report that information.

(B) Disinfectants. Water systems must report the information specified in Table 36 as follows:

Table 36

Water systems which	Must report[1]
Monitor for chlorine or chloramines as required by OAR 333-061-0036(4)(i)(A).	(1) The number of samples taken during each month of the last quarter. (2) The monthly arithmetic average of all samples taken in each month for the last 12 months. (3) The arithmetic average of all monthly averages for the last 12 months. (4) Whether the MRDL was violated as determined in OAR 333-061-0036(4)(i).
Monitor for chlorine dioxide as required by OAR 333-061-0036(4)(i)(B).	(1) The dates, results, and locations of samples taken during the last quarter. (2) Whether the MRDL was violated as determined in OAR 333-061-0036(4)(i). (3) Whether the MRDL was exceeded in any two consecutive daily samples and whether the resulting violation was acute or non-acute.

[1]The Authority may choose to perform calculations and determine whether the MRDL was violated, in lieu of having the system report that information.

(C) Disinfection byproduct precursors and enhanced coagulation or enhanced softening. Water systems must report the information specified in Table 37 as follows:

Table 37

Water systems which	Must Report [1]
Monitor monthly or quarterly for TOC as required by OAR 333-061-0036(4)(k) and are required to meet the enhanced coagulation or enhanced softening requirements as required by OAR 333-061-0032(10)(d)(B) or (C).	The number of paired (source water and treated water) samples taken during the last quarter; The location, date, and results of each paired sample and associated alkalinity taken during the last quarter; For each month in the reporting period that paired samples were taken, the arithmetic average of the percent reduction of TOC for each paired sample and the required TOC percent removal; Calculations for determining compliance with the TOC percent removal requirements, as specified by OAR 333-061-0032(10)(e)(A); and Whether the system is in compliance with the enhanced coagulation or enhanced softening percent removal requirements as specified in OAR 333-061-0032(10)(d) for the last four quarters.
Monitor monthly or quarterly for TOC as required by OAR 333-061-0036(4)(k) and meeting one or more of the alternative compliance criteria specified by OAR 333-061-0032(10)(c)(A) or (B).	The alternative compliance criterion that the system is using; The number of paired samples taken during the last quarter; The location, date, and result of each paired sample and associated alkalinity taken during the last quarter;

	The running annual arithmetic average based on monthly averages (or quarterly samples) of source water TOC for systems meeting a criterion specified in OAR 333-061-0032(10)(c)(A)(i) or (iii) or of treated water TOC for systems meeting the criteria specified in OAR 333-061-0032 (10)(c)(A)(ii); The running annual arithmetic average based on monthly averages (or quarterly samples) of source water SUVA for systems meeting the criteria specified in OAR 333-061-0032(10)(c)(A)(v) or of treated water SUVA for systems meeting the criteria specified in OAR 333-061-0032(10)(c)(A)(vi); The running annual average of source water alkalinity for systems meeting the criterion specified in OAR 333-061-0032(10)(c)(A)(iii) and of treated water alkalinity for systems meeting the criterion specified in OAR 333-061-0032(10)(c)(B)(i); The running annual average for both TTHM and HAA5 for systems meeting the criteria specified in OAR 333-061-0032(10)(c)(A)(iii) or (iv); The running annual average of the amount of magnesium hardness removal (as $CaCO_3$, in mg/L) for systems meeting the criteria specified in OAR 333-061-0032(10)(c)(B)(ii); and Whether the system is in compliance with the particular alternative compliance criteria specified in OAR 333-061-0032(10)(c)(A) or (B).
Surface water or groundwater under the direct influence of surface water systems seeking to qualify for or remain on reduced TTHM/HAA5 monitoring must report the following source water TOC information for each treatment plant that treats surface water or groundwater under the direct influence of surface water to the Authority within 10 days of the end of any quarter in which monitoring is required:	The number of source water TOC samples taken each month during last quarter; The date and result of each sample taken during last quarter; The quarterly average of monthly samples taken during last quarter or the result of the quarterly sample; The running annual average (RAA) of quarterly averages from the past four quarters; and Whether the RAA exceeded 4.0 mg/L.

[1]The Authority may choose to perform calculations and determine whether the MCL was violated, in lieu of having the system report that information.

(D) The Authority may choose to perform calculations and determine whether the MCL was exceeded or the system is eligible for reduced monitoring in lieu of having the system report that information.

(k) Systems using surface water or GWUDI sources must respond to the Authority within 45 days of receiving a sanitary survey report or comprehensive performance evaluation report that identifies significant deficiencies. The response must meet the criteria specified in OAR 333-061-

0076(6)(a). Failure to report to the Authority requires a Tier 2 public notice as prescribed in OAR 333-061-0042(2)(b)(D).

(l) Reporting requirements related to triggered coliform investigations

(A) Water suppliers required to conduct a level 1 coliform investigation as prescribed by OAR 333-061-0078 must submit a completed investigation report as prescribed by OAR 333-061-0078(3) to the Authority within 30 days of learning a trigger as specified in OAR 333-061-0078(2) was exceeded. Water suppliers subject to a level 2 coliform investigation as prescribed by OAR 333-061-0078(3) must ensure a completed investigation report is submitted to the Authority within 30 days of learning a trigger as specified in OAR 333-061-0078(2) was exceeded.

(B) Water suppliers must report to the Authority the completion of every scheduled corrective action within 30 days for corrections not completed by the time the investigation report was reported to the Authority as specified in paragraph (1)(l)(A) of this rule.

(m) Water suppliers that have failed to comply with a coliform monitoring requirement as prescribed by OAR 333-061-0036(6) must report the monitoring violation to the Authority within 10 days after the water supplier discovers the violation, and notify the public in accordance with OAR 333-061-0042.

(n) Water suppliers responsible for seasonal water systems must certify in a manner determined by the Authority, that an Authority-approved start-up procedure has been completed prior to serving water to the public. Water suppliers must submit the certification to the Authority prior to the seasonal water system opening for the season and serving water to the public.

(o) Reporting source water monitoring results for *Cryptosporidium* and *E. coli* collected in accordance with OAR 333-061-0036(5)(e). Water systems must report results from the source water monitoring no later than 10 days after the end of the first month following the month when the sample is collected as prescribed by this subsection.

(A) Water systems must report the following data elements for each *Cryptosporidium* analysis: PWS ID, facility ID, sample collection date, sample type (field or matrix spike), sample volume filtered in Liters (to nearest 250 mL), whether 100 percent of the filtered volume was examined, and the number of oocysts counted.

(i) For matrix spike samples, water systems must also report the sample volume spiked and estimated number of oocysts spiked. These data are not required for field samples.

(ii) For samples in which less than 10 L is filtered or less than 100 percent of the sample volume is examined, systems must also report the number of filters used and the packed pellet volume.

(iii) For samples in which less than 100 percent of sample volume is examined, systems must also report the volume of re-suspended concentrate and volume of this re-suspension processed through immunomagnetic separation.

(B) Water systems must report the following data elements for each *E. coli* analysis: PWS ID, facility ID, sample collection date, analytical method number, method type, source type (flowing stream, lake/reservoir, or GWUDI), *E. coli*/100 mL, and turbidity (if required).

(p) Reporting requirements relating to *Cryptosporidium* protection.

(A) Water systems must report sampling schedules prescribed by OAR 333-061-0036(5)(f) and source water monitoring results in accordance with subsection (1)(p) of this rule unless they notify the Authority that they will not conduct source water monitoring due to meeting the criteria of OAR 333-061-0036(5)(e)(D).

(B) Filtered water systems must report their *Cryptosporidium* bin classification as described in OAR 333-061-0032(4)(f).

(C) Unfiltered water systems must report their mean source water *Cryptosporidium* level as described in OAR 333-061-0032(2)(c).

(D) Water systems must report disinfection profiles and benchmarks to the Authority as prescribed by OAR 333-061-0036(4)(l) and OAR 333-061-0060(1)(e) prior to making a significant change in disinfection practice.

(E) Water systems must report to the Authority any microbial toolbox options as specified in Table 38 used to comply with treatment requirements under OAR 333-061-0032(2)(c), (3)(e) through (g), and (4)(g). Alternatively, the Authority may approve a water system to operate within required parameters for treatment credit rather than reporting monthly operational data for toolbox options.

Table 38
Microbial Toolbox Reporting Requirements

Toolbox Option	Systems must submit the following information	On the following schedule*
Watershed control program	Notice of intention to develop a new or continue an existing watershed control program	No later than two years before the applicable treatment compliance date.
	Watershed control plan	No later than one year before the applicable treatment compliance date.
	Annual watershed control program status report	Every 12 months, beginning one year after the applicable treatment compliance date.
	Watershed sanitary survey report	For a community water system, every three years beginning three years after the applicable treatment compliance

		date. For non-community systems, every 5 years beginning five years after the applicable treatment compliance date.
Alternative source / intake management	Verification the system has relocated the intake or adopted the intake withdrawal procedure reflected in monitoring results	No later than the applicable compliance date.
Presedimentation	Monthly verification of the following: continuous basin operation; treatment of 100% of the flow; continuous addition of a coagulant; and at least 0.5-log mean reduction of influent turbidity or compliance with alternate Authority approved criteria.	Monthly reporting within 10 days following the month in which the monitoring was conducted, beginning on the applicable treatment compliance date.
Two-stage lime softening	Monthly verification of the following: chemical addition and hardness precipitation occurred in two separate and sequential softening stages prior to filtration; and both stages treated 100% of the plant flow.	Monthly reporting within 10 days following the month in which the monitoring was conducted, beginning on the applicable treatment compliance date.
Bank Filtration	1. Initial demonstration of an unconsolidated, predominantly sandy aquifer with a setback distance of at least 25 feet for 0.5 log credit, or 50 feet for 1.0 log credit 2. A report listing the result and assessing the cause if the monthly average of daily max turbidity is greater than 1 NTU.	1. No later than the applicable treatment compliance date. 2. Within 30 days following the month in which the monitoring was conducted, beginning on the applicable treatment compliance date.
Combined filter performance	Monthly verification of combined filter effluent (CFE) turbidity levels less than or equal to 0.15 NTU in at least 95 percent of the 4 hour CFE measurements taken each month.	Monthly reporting within 10 days following the month in which the monitoring was conducted, beginning on the applicable treatment compliance date.
Individual filter performance	Monthly verification of the following: Individual filter effluent (IFE) turbidity levels less than or equal to 0.15 NTU in at least 95% of samples each month in each filter; and no IFE turbidity greater than 0.3 NTU in two consecutive readings 15 minutes apart.	Monthly reporting within 10 days following the month in which the monitoring was conducted, beginning on the applicable treatment compliance date.
Demonstration of performance	1. Results from testing, following an Authority approved protocol. 2. Monthly verification of operation within conditions of Authority approval for demonstration of performance credit.	1. No later than the applicable treatment compliance date. 2. Within 10 days following the month in which monitoring was conducted, beginning on the applicable treatment compliance date.

Bag filters and cartridge filters	1. Demonstration that the process meets the definition of bag or cartridge filtration, and that removal efficiency established through challenge testing meets the criteria specified in OAR 333-061-0050(4)(c)(J). 2. Monthly verification that 100% of plant flow was filtered.	1. No later than the applicable treatment compliance date. 2. Within ten days following the month in which monitoring was conducted, beginning on the applicable treatment compliance date.
Membrane Filtration	1. Results of verification testing demonstrating that removal efficiency established through challenge testing meets the criteria in OAR 333-061-0050(4)(c)(I); and the integrity test method and parameters, including resolution, sensitivity, test frequency, control limits, and associated baseline. 2. Monthly report summarizing all direct integrity tests above the control limit; and any turbidity or alternative Authority approved indirect integrity monitoring results triggering direct integrity testing (and the corrective action that was taken), if applicable.	1. No later than the applicable treatment compliance date. 2. Within ten days following the month in which monitoring was conducted, beginning on the applicable treatment compliance date.
Second stage filtration	Monthly verification that 100% of flow was filtered through both stages and that first stage was preceded by coagulation step.	Within ten days following the month in which monitoring was conducted, beginning on the applicable treatment compliance date.
Slow sand filtration (as secondary filter)	Monthly verification that both a slow sand filter and a preceding separate stage of filtration treated 100% of flow.	Within ten days following the month in which monitoring was conducted, beginning on the applicable treatment compliance date.
Chlorine Dioxide	Summary of CT values for each day as described in OAR 333-061-0036(5)(c).	Within ten days following the month in which monitoring was conducted, beginning on the applicable treatment compliance date.
Ozone	Summary of CT values for each day as described in OAR 333-061-0036(5)(c).	Within ten days following the month in which monitoring was conducted, beginning on the applicable treatment compliance date.
UV	Validation test results demonstrating operating conditions that achieve required UV dose. Monthly report summarizing the percentage of water entering the distribution system that was not treated by UV reactors operating within validated conditions for the	No later than the applicable treatment compliance date. Within 10 days following the month in which monitoring was conducted, beginning on the applicable treatment compliance date.

	required dose as specified in OAR 333-061-0036(5)(c)(D).	

* Compliance dates are specified in OAR 333-061-0032(1)(a)(F)

(q) Water systems must report the use of uncovered finished water storage facilities to the Authority as described in OAR 333-061-0032(12).

(r) Reporting violations

(A) Failure to report coliform sampling results as required by OAR 333-061-0036(6) after monitoring was properly conducted in a timely manner is a violation of this rule.

(B) Failure to submit a completed coliform investigation report form after conducting an investigation or failure to ensure a coliform investigation report is submitted following a level 2 coliform investigation is a violation of this rule.

(C) Failure to notify the Authority following an *E. coli*-positive sample as required by paragraph (1)(c)(C) of this rule is a violation of this rule.

(D) Failure to certify and report completion of an Authority-approved start-up procedure at a seasonal water system as required by subsection (1)(n) of this rule is a violation of this rule.

(2) Record Maintenance by Water Suppliers:

(a) Water suppliers of public water systems shall retain records relating to the quality of the water produced and the condition of the physical components of the system. These records shall be kept at a convenient location within or near the area served by the water system;

(b) Records of microbiological analyses shall be kept for at least five years. Records of chemical analyses, secondary contaminants, turbidity, radioactive substances, and monitoring plans shall be kept for at least 10 years. Data may be transferred to tabular summaries provided the following information is included:

(A) Date, place and time of sampling, and the name of the person who collected the sample;

(B) Identification of the sample as to whether it was a routine finished water sample, repeat sample, raw water sample or special purpose sample;

(C) Date and time of the analysis, the laboratory and person performing the analysis; and,

(D) Analytical method used and results of the analysis.

(c) Records of actions taken to correct items of non-compliance shall be kept for at least three years after the last action taken with respect to the particular violation;

(d) Reports, summaries or communications on sanitary surveys shall be kept for at least 10 years;

(e) Records concerning variances or permits shall be kept for at least five years after the expiration of the variance or permit;

(f) Records of residual disinfectant measurements shall be kept for at least two years.

(g) All public water systems subject to the requirements of subsection (1)(f) of this rule shall retain the original records of all sampling data and analyses, reports, surveys, letters, evaluations, schedules, Authority determinations, and any other information required for no fewer than 12 years.

(h) Copies of public notices issued pursuant to OAR 333-061-0042 and certifications made to the Authority must be kept for three years after issuance.

(i) For water systems using surface water or groundwater under the direct influence of surface water that uses conventional filtration treatment or direct filtration treatment and that recycles spent filter backwash water, thickener, supernatant, or liquids from dewatering processes, water suppliers must collect and retain on file recycle flow information specified in paragraphs (2)(i)(A) through (F) of this rule for review and evaluation by the Authority:

  (A) Copy of the recycle notification and information submitted to the Authority as required by OAR 333-061-0032(11);

  (B) List of all recycle flows and the frequency with which they are returned;

  (C) Average and maximum backwash flow rate through the filters and the average and maximum duration of the filter backwash process in minutes;

  (D) Typical filter run length and a written summary of how filter run length is determined;

  (E) The type of treatment provided for the recycle flow;

  (F) Data on the physical dimensions of the equalization or treatment units, typical and maximum hydraulic loading rates, type of treatment chemicals used and average dose and frequency of use, and frequency at which solids are removed, if applicable.

(j) Water suppliers must maintain the following information in their records relating to water systems using groundwater sources:

  (A) Documentation of corrective actions for a period of not less than 10 years;

  (B) Documentation of notice to the public as prescribed by OAR 333-061-0042(8) for a period of not less than three years;

  (C) Records of decisions made in accordance with OAR 333-061-0036(6)(i)(A)(iv) and records of invalidation of *E. coli* -positive groundwater source samples in accordance with OAR 333-061-0036(6)(l) for a period of not less than five years;

(D) For purchasing water systems, documentation of notification to the wholesale system(s) of total-coliform positive samples not invalidated in accordance under OAR 333-061-0036(6)(a)(F) for a period of not less than five years; and

(E) For any water system required to perform compliance monitoring in accordance with OAR 333-061-0032(7)(b):

(i) Records of the Authority-specified minimum disinfectant residual for a period of not less than ten years;

(ii) Records of the lowest daily residual disinfectant concentration and records of the date and duration of any failure to maintain the Authority-prescribed minimum residual disinfectant concentration for a period of more than four hours for a period of not less than five years; and

(iii) Records of Authority-specified compliance requirements for membrane filtration, parameters specified by the Authority for Authority-approved alternative treatment, and records of the date and duration of any failure to meet the membrane operating, membrane integrity, or alternative treatment operating requirements for more than four hours for a period of not less than five years.

(k) For systems required to compile a disinfection profile, the results of the profile (including raw data and analysis) must be kept indefinitely as well as the disinfection benchmark (including raw data and analysis) determined from the profile.

(l) Recordkeeping requirements pertaining to *Cryptosporidium* protection. Water systems must keep:

(A) Results from the source water monitoring prescribed by OAR 333-061-0036(5)(e) for three years after bin classification in accordance with OAR 333-061-0032(4)(f) for filtered systems, or determination of the mean *Cryptosporidium* level in accordance with OAR 333-061-0032(2)(c) for unfiltered systems for the particular round of monitoring.

(B) Any notification to the Authority that they will not conduct source water monitoring due to meeting the criteria specified in OAR 333-061-0036(5)(e)(D) for three years.

(C) The results of treatment monitoring associated with microbial toolbox options as prescribed by OAR 333-061-0032(14) through (18) and with uncovered finished water reservoirs in accordance with OAR 333-061-0032(12)(b), as applicable, for three years.

(m) IDSE reports (including Authority modifications) must be kept for at least 10 years. IDSE standard monitoring plans and IDSE system specific study plans must be retained at least as long as the IDSE report or any Authority

modifications, whichever is longer. IDSE reports and any Authority modification must be made available for review by the Authority or the public.

(n) Water systems must retain a complete copy of any 40/30 certification submitted to the EPA for 10 years after the date the certification was submitted. The certification, all data upon which the certification is based, and any EPA notification must be available for review by the Authority or the public.

(o) Water suppliers must maintain any coliform investigation form, regardless of who conducts the investigation, and documentation of corrective actions completed as a result of those investigations, or other available summary documentation of the sanitary defects and corrective actions taken as specified in OAR 333-061-0078 for Authority review. This record must be maintained for a period not less than five years after completion of the coliform investigation or corrective action, whichever is later.

(p) Water suppliers must maintain a record of any repeat sample collected that meets Authority criteria for an extension of the 24-hour period for collecting repeat samples as provided for in OAR 333-061-0036(6)(g).

Stat. Auth.: ORS 448.131
Stats. Implemented: ORS 448.131, 448.150

333-061-0042
Public Notice

(1) The owner or operator of a public water system must provide public notice to persons served by the water system for all violations and situations established by these rules.

(a) Public water systems that provide drinking water to purchasing water systems are required to give public notice to the owner or operator of the purchasing water system who is responsible for providing public notice to the persons it serves.

(b) If a public water system has a violation in a portion of the distribution system that is physically or hydraulically isolated from other parts of the distribution system, the Authority may, in writing, allow the system to limit distribution of the public notice to only persons served by that portion of the system which is out of compliance.

(c) A copy of any public notice must be sent to the Authority as required in OAR 333-061-0040(1)(i).

(2) Public notice requirements are divided into three tiers to take into account the seriousness of the violation or situation and of any potential adverse health effects that may be involved:

(a) Tier 1: A Tier 1 notice is required for violations and situations with significant potential to have serious adverse effects on human health as a result of short-term exposure, including but not limited to the following:

(A) Exceeding the MCL for *E. Coli* as specified in OAR 333-061-0030(4);

(B) Exceeding the MCL for nitrate, nitrite, or total nitrate and nitrite, or when the water system fails to take a confirmation sample within 24 hours of the system's receipt of the first sample showing an exceedance of the nitrate or nitrite MCL;

(C) Exceeding the MRDL for chlorine dioxide as prescribed in OAR 333-061-0031 when one or more samples taken in the distribution system the day following an exceedance of the MRDL at the entrance of the distribution system exceed the MRDL, or when the water system does not take the required samples in the distribution system;

(D) Violation of the interim operating plan for turbidity for a surface water system that does not meet the exception criteria for avoiding filtration under OAR 333-061-0032 nor has installed filtration treatment as defined by these rules when the Authority determines after consultation that a Tier 1 notice is required or where consultation does not take place within 24 hours after the system learns of the violation;

(E) Violation of a surface water treatment requirement as prescribed in OAR 333-061-0032, resulting from a single exceedance of the maximum allowable turbidity limit, where the Authority determines after consultation that a Tier 1 notice is required or where consultation does not take place within 24 hours after the system learns of the violation;

(F) Occurrence of a waterborne disease outbreak or other waterborne emergency, such as a failure or significant interruption in key water treatment processes, a natural disaster that disrupts the water supply or distribution system, or a chemical spill or unexpected loading of possible pathogens into the source water that significantly increases the potential for drinking water contamination;

(G) Detection of *E. coli* in source water samples collected as specified in OAR 333-061-0036(6)(i) through (k); and

(H) Other violations or situations with significant potential to have serious adverse effects on human health as a result of short term exposure, as determined by the Authority.

(b) Tier 2: required for all violations and situations with potential to have serious adverse effects on human health, including but not limited to:

(A) All violations of the MCL, MRDL, and treatment technique requirements, except where a Tier 1 notice is required or where the Authority determines that a Tier 1 notice is required.

(B) Violations of the monitoring and testing procedure requirements, where the Authority determines that a Tier 2 rather than a Tier 3

public notice is required, taking into account potential health impacts and persistence of the violation.

(C) Failure to comply with the terms and conditions of any variance or permit in place.

(D) Failure to respond to sanitary survey reports or comprehensive performance evaluation reports prepared by the Authority as required in OAR 333-061-0076 and 333-061-0077.

(E) Use of an emergency groundwater source that has been identified as potentially under the direct influence of surface water, but has not been fully evaluated.

(F) Failing to comply with groundwater treatment or corrective action requirements specified in OAR 333-061-0032.

(G) Failing to complete a coliform investigation or corrective action related to a coliform investigation as prescribed by OAR 333-061-0078.

(H) Failing to complete or follow an Authority approved start-up procedure prior to serving water to the public at a seasonal water system.

(c) Tier 3: required for other violations or situations not included in Tier 1 and 2, including but not limited to:

(A) Failing to conduct monitoring or reporting as prescribed by these rules except where the Authority determines a Tier 1 or Tier 2 notice is required;

(B) Failure to comply with a testing procedure established in these rules except where a Tier 1 notice is required or where the Authority determines that a Tier 2 notice is required;

(C) Operation under a variance or permit granted by the Authority;

(D) Availability of unregulated contaminant monitoring results as required under section (6) of this rule;

(E) Exceedance of the fluoride secondary MCL as required under section (7) of this rule; and

(F) Disinfection profiling and benchmarking monitoring and testing violations.

(G) Failing to submit a completed investigation report or notify the Authority when corrective action is completed related to a coliform investigation as prescribed by OAR 333-061-0078.

(H) Failing to certify to the Authority upon completing an Authority approved start-up procedure at a seasonal water system.

(I) Failure to analyze for *E. coli* following a total coliform-positive routine sample collected according to OAR 333-061-0036(6)(b) through (g).

(J) Failure to notify the Authority following an *E. coli*-positive sample in a timely manner as required by OAR 333-061-0036(6)(a)(D).

(K) Failure to conduct recordkeeping as prescribed by OAR 333-061-0040(2)(o) or (p).

(d) The Authority may require public notice for violations or other situations not listed in this section, or a higher tier of public notice for specific violations and situations listed in this section.

(3) All public notices established by these rules shall be distributed in the form, manner and frequency as described in this section:

(a) Tier 1 notices: public water systems required to distribute Tier 1 notices must:

(A) Provide the notice as soon as practical, but no later than 24 hours after learning of the violation or situation;

(B) Initiate consultation with the Authority as soon as practical, but no later than 24 hours after learning of the violation or situation;

(C) Comply with any additional notification requirements established as a result of consultation with the Authority;

(D) The form and manner used by the public water system are to fit the specific situation, but must be designed to reach residential, transient, and non-transient users of the water system. In order to reach all persons served, one or more of the following forms of delivery must be used:

(i) Appropriate broadcast media such as radio and television;

(ii) Posting of the notice in conspicuous locations throughout the area served by the water system;

(iii) Hand delivery of the notice to persons served by the water system; or

(iv) Another delivery method approved in writing by the Authority.

(b) Tier 2 notices: water suppliers required to distribute Tier 2 notices must:

(A) Provide the public notice as soon as practical, but no later than 30 days after learning of the violation or situation. The Authority may, in writing, extend additional time for the initial notice of up to three months in appropriate circumstances;

(B) If the public notice is posted, leave the notice in place as long as the violation or situation exists, but in no case for less than seven days, even if the violation or situation is resolved;

(C) Repeat the notice every three months as long as the violation or situation persists.

(D) For the turbidity violations specified in subparagraphs (3)(b)(D)(i) and (ii) of this rule, public water systems must consult with the Authority as soon as practical, but no later than 24 hours after learning of the violation to determine whether a Tier 1 public notice is required to

protect public health. When consultation with the Authority does not take place within the 24 hour period, the water system must distribute a Tier 1 notice of the violation within the next 24 hours as prescribed in subsection (3)(a) of this rule:

(i) Violation of the interim operating plan for turbidity for a surface water system that does not meet the exception criteria for avoiding filtration under OAR 333-061-0032 nor has installed treatment as defined by these rules; or

(ii) Violation of the SWTR, LT1ESWTR, or IESWTR treatment technique requirement as prescribed in OAR 333-061-0032, resulting from a single exceedance of the maximum allowable turbidity limit.

(E) The form and manner used by the public water system for initial and repeat notices must be calculated to reach persons served by the system in the required time period. The form and manner may vary based on the specific situation and type of water system, but it must at a minimum meet the following requirements:

(i) Unless directed otherwise by the Authority in writing, community water systems must provide notice by:

(I) Mail or other direct delivery to each customer receiving a bill and to other service connections to which water is delivered by the public water system; and

(II) Any other method reasonably calculated to reach other persons regularly served by the water system who would not normally be reached by mail or direct delivery. Other methods may include: local newspapers, delivery of multiple copies for distribution, posting, e-mail and community organizations.

(ii) Unless directed otherwise by the Authority in writing, non-community water systems must provide notice by:

(I) Posting the notice in conspicuous locations frequented by users throughout the distribution system, or by mail or direct delivery to each customer or connection; and

(II) Any other method reasonably calculated to reach other persons not normally reached by posting, mail or direct delivery. Other methods may include: local newspaper, newsletter, e-mail and multiple copies in central locations.

(c) Tier 3 notices: public water systems required to distribute Tier 3 notices must:

(A) Provide the public notice not later than one year after learning of the violation or situation or begins operating under a variance or permit.

Following the initial notice, the system must repeat the notice annually for as long as the violation, variance, permit or other situation persists. If the public notice is posted, the notice must remain in place for as long as the violation, variance, permit, or other situation persists, but in no case less than seven days even if the violation or situation is resolved.

(B) Instead of individual Tier 3 public notices, a community public water system may use its annual Consumer Confidence Report (CCR) for the initial and all repeat notices detailing all violations and situations that occurred during the previous twelve months. This method may be used as long as it is distributed within the one year requirement in paragraph (3)(c)(A) of this rule, follows the public notice content required under section (4) of this rule and is delivered to users as required under paragraph (3)(c)(C) of this rule.

(C) The form and manner used by the public water system for initial and repeat notices must be calculated to reach persons served by the system in the required time period. The form and manner may vary based on the specific situation and type of water system, but it must at a minimum meet the following requirements:

(i) Unless directed otherwise by the Authority in writing, community water systems must provide notice by:

(I) Mail or other direct delivery to each customer receiving a bill and to other service connections to which water is delivered by the public water system; and

(II) Any other method reasonably calculated to reach other persons regularly served by the water system who would not normally be reached by mail or direct delivery. Other methods may include: local newspapers, delivery of multiple copies for distribution, posting, e-mail and community organizations.

(ii) Unless directed otherwise by the Authority in writing, non-community water systems must provide notice by:

(I) Posting the notice in conspicuous locations frequented by users throughout the distribution system, or by mail or direct delivery to each customer or connection; and

(II) Any other method reasonably calculated to reach other persons not normally reached by posting, mail or direct delivery. Other methods may include: local newspaper, newsletter, e-mail and delivery of multiple copies in central locations.

(4) Content of Public Notice:

(a) When a public water system has a violation or situation prescribed in these rules requiring a public notice, each public notice must include the following elements:

(A) A description of the violation or situation, including the contaminant(s) of concern, and the contaminant level;

(B) When the violation or situation occurred;

(C) Any potential adverse health effects including the standard language required under paragraphs (4)(d)(A) and (B) of this rule;

(D) The population at risk, including subpopulations particularly vulnerable if exposed to the contaminant in their drinking water;

(E) Whether alternative water supplies should be used;

(F) What actions consumers should take, including when they should seek medical help, if known;

(G) What the system is doing to correct the violation or situation;

(H) When the water system expects to return to compliance or resolve the situation;

(I) The name, business address, and phone number of the water system owner, operator, or designee of the public water system as a source of additional information concerning the notice; and

(J) A statement to encourage the notice recipient to distribute the public notice to other persons served, using the standard language under paragraph (4)(d)(C) of this rule.

(b) Content of public notices for public water systems operating under a variance or permit:

(A) If a public water system has been granted a variance or permit, the public notice must contain:

(i) An explanation of the reasons for the variance or permit;

(ii) The date on which the variance of permit was issued;

(iii) A brief status report on the steps the system is taking to install treatment, find alternative sources of water or otherwise comply with the terms and schedules of the variance or permit; and

(iv) A notice of any opportunity for public input in the review of the variance or permit.

(B) If a public water system violates the conditions of a variance or permit, the public notice must contain the ten elements listed in subsection (4)(a) of this rule.

(c) Public notice presentation:

(A) Each public notice required by these rules must:

(i) Be displayed in a conspicuous way when printed or posted;

(ii) Not contain overly technical language or very small print;

(iii) Not be formatted in a way that defeats the purpose of the notice;

(iv) Not contain language which nullifies the purpose of the notice.

(B) Each public notice required by these rules must comply with multilingual requirements as follows:

(i) For public water systems serving a large proportion of non-English speaking consumers, as determined by the Authority, the public notice must contain information in the appropriate language(s) regarding the importance of the notice or contain a telephone number or address where persons served may contact the water system to obtain a translated copy of the notice or to request assistance in the appropriate language.

(ii) In cases where the Authority has not determined what constitutes a large proportion of non-English speaking consumers, the public water system must include in the public notice the same information required in subparagraph (4)(c)(B)(i) of this rule where appropriate to reach a large proportion of non-English speaking persons served by the water system.

(d) Standard language: public water systems are required to include the following standard language in their public notice:

(A) Public water systems must include in each public notice the specific health effects language as prescribed in OAR 333-061-0097 for each MCL, MRDL, and treatment technique violation and for each violation of a condition of a variance or permit.

(B) Public water systems must include the following language in their notice, including the language necessary to fill in the blanks, for all monitoring and testing procedure violations:

We are required to monitor your drinking water for specific contaminants on a regular basis. Results of regular monitoring are an indicator of whether or not your drinking water meets health standards. During {compliance period}, we "did not monitor or test" or "did not complete all monitoring or testing" for {contaminants(s)}, and therefore cannot be sure of the quality of your drinking water during that time.

(C) Public water systems are required where applicable to include the following standard language to encourage the distribution of the public notice to all persons served:

Please share this information with all the other people who drink this water, especially those who may not have received this notice directly (for example, people in apartments, nursing homes, schools, and businesses). You can do this by posting this notice in a public place or distributing copies by hand or mail.

(5) Notice to new billing units or new customers:

(a) Community water systems must give a copy of the most recent public notice for any continuing violation, the existence of a variance or permit, or other ongoing situations requiring a public notice to all new billing units or new customers prior to or at the time service begins.

(b) Non-community water systems must continuously post the public notice in conspicuous locations in order to inform new consumers of any continuing violation, variance or permit, or other situations requiring a public notice for as long as the violation, variance, permit, or other situation persists.

(6) Special notice of availability of unregulated contaminant monitoring results:

(a) The owner or operator of a community water system or non-transient, non-community water systems required by EPA to monitor for unregulated contaminants must notify persons served by the system of the availability of the results of such sampling no later than 12 months after the monitoring results are known.

(b) The form and manner of the public notice must follow the requirements for a tier 3 public notice as prescribed in paragraphs (3)(c)(B) and (C) of this rule. The notice must also identify a person and provide the telephone number to contact for information on the monitoring results.

(7) Special notice for exceedance of the SMCL for fluoride:

(a) Community water systems that exceed the fluoride secondary MCL of 2 mg/l, determined by the last single sample taken in accordance with OAR 333-061-0036(2), but do not exceed the MCL of 4 mg/l for fluoride must provide the public notice in subsection (7)(d) of this rule to persons served by the water system. Public notice must be provided as soon as practical but no later than 12 months from the day the water system learns of the exceedance. The public water system must repeat the notice at least annually for as long as the exceedance persists. The Authority may require an initial notice sooner than 12 months and repeat notices more frequently than annually on a case-by-case basis;

(b) A copy of the notice must also be sent to all new billing units and new customers at the time service begins and to the Authority. If the public notice is posted, the notice must remain in place for as long as the secondary MCL is exceeded, but in no case less than seven days, even if the exceedance is eliminated;

(c) The form and manner of the public notice, including repeat notices must follow the requirements for tier 3 public notice;

(d) The notice must contain the following language, including the language necessary to fill in the blanks:

This is an alert about your drinking water and a cosmetic dental problem that might affect children under nine years of age. At low levels, fluoride can help prevent cavities, but children drinking water containing more than 2 mg/l of fluoride may develop cosmetic

discoloration of their permanent teeth (dental fluorosis). The drinking water provided by your community water system {name} has a fluoride concentration of {insert value} mg/l.

Dental fluorosis, in its moderate or severe forms, may result in a brown staining or pitting of the permanent teeth. This problem occurs only in developing teeth, before they erupt from the gums. Children under nine should be provided with alternative sources of drinking water or water that has been treated to remove the fluoride to avoid the possibility of staining and pitting of their permanent teeth. You may also want to contact your dentist about proper use by young children of fluoride-containing products. Older children and adults may safely drink the water.

Drinking water containing more than 4 mg/l of fluoride (the U.S. EPA's drinking water standard) can increase your risk of developing bone disease. Your drinking water does not contain more than 4 mg/l of fluoride, but we're required to notify you when we discover that the fluoride levels in your drinking water exceed 2 mg/l because of this cosmetic dental problem.

For more information, please call {name of water system contact} of {name of community water system} at {phone number}. Some home water treatment units are also available to remove fluoride from drinking water. To learn more about available home water treatment units, you may call NSF International at 1-877-8-NSF-HELP.

(8) Special notice to the public for significant deficiencies or source water fecal contamination.

(a) A community water system that uses groundwater and that receives notification from the Authority of a significant deficiency or of an *E. coli*-positive groundwater source sample, that is not invalidated in accordance with OAR 333-061-0036(6)(l), must inform the public served by the water system of the *E. coli*-positive source sample or the significant deficiency that has not been corrected as prescribed by OAR 333-061-0043(5). The water system must continue to inform the public annually until the significant deficiency is corrected, or the fecal contamination in the groundwater source is determined by the Authority to be corrected in accordance with OAR 333-061-0032(6).

(b) A non-community groundwater system that receives notice from the Authority of a significant deficiency must inform the public served by the water system in a manner approved by the Authority of the significant deficiency if it has not been corrected within 12 months of the notification by the Authority. The water system must continue to inform the public annually until the significant deficiency is corrected. The information must include:

(A) The nature of the significant deficiency and the date the significant deficiency was identified by the Authority;

(B) The Authority-approved plan and schedule for correction of the significant deficiency, including any interim measures, progress to date, and any interim measures completed; and

(C) For water systems with a large proportion of non-English speaking consumers as determined by the Authority, information must be distributed in the appropriate language(s) regarding the importance of the notice or a telephone number or address where consumers may contact the system to obtain a translated copy of the notice or assistance in the appropriate language.

(c) If directed by the Authority, a non-community water system with significant deficiencies that have been corrected must inform its customers of the significant deficiencies, how the deficiencies were corrected, and the dates of correction under subsection (8)(b) of this rule.

(9) Special notice for repeated failure to conduct monitoring of the source water for Cryptosporidium and for failure to determine bin classification or mean *Cryptosporidium* level.

(a) Special notice for repeated failure to monitor. The owner or operator of a community or non-community water system that is required to monitor source water in accordance with OAR 333-061-0036(5)(e) must notify persons served by the water system that monitoring has not been completed as required no later than 30 days after the system has failed to collect any three months of monitoring as specified in Table 33. The notice must be repeated as specified in subsection (3)(b) of this rule.

(b) Special notice for failure to determine bin classification or mean *Cryptosporidium* level. The owner or operator of a community or non-community water system that is required to determine a bin classification in accordance with OAR 333-061-0032(4)(f), or to determine a mean *Cryptosporidium* level as prescribed by OAR 333-061-0032(2)(c), must notify persons served by the water system that the determination has not been made as required no later than 30 days after the system has failed to report the determination in accordance with OAR 333-061-0032(2)(c)(A) through (D) or OAR 333-061-0032(4)(f)(G) and (H).

(A) The notice must be repeated as specified in subsection (3)(b) of this rule.

(B) The notice is not required if the system is complying with an Authority approved schedule to address the violation.

(c) The form and manner of the special notice must follow the requirements for a Tier 2 public notice as prescribed in subsection (3)(b) of this rule. The special notice must be presented as required by subsection (4)(c) of this rule.

(d) The special notice must contain the following language, including system specific language for the text within the braces.

(A) The special notice for repeated failure to conduct monitoring must contain:

{Water system name} is required to monitor the source of your drinking water for *Cryptosporidium*. Results of the monitoring are to be used to determine whether water treatment at the {treatment plant name} is sufficient to adequately remove *Cryptosporidium* from your drinking water. We are required to complete this monitoring and make this determination by {required bin determination date}. We ``did not monitor or test'' or ``did not complete all monitoring or testing'' on schedule and, therefore, we may not be able to determine by the required date what treatment modifications, if any, must be made to ensure adequate *Cryptosporidium* removal. Missing this deadline may, in turn, jeopardize our ability to have the required treatment modifications, if any, completed by the deadline required, {date}. For more information, please call {name of water system contact} of { water system name} at {phone number}.

(B) The special notice for failure to determine bin classification or mean *Cryptosporidium* level must contain the following language:

{Water system name} is required to monitor the source of your drinking water for *Cryptosporidium* in order to determine by {date} whether water treatment at the {treatment plant name} is sufficient to adequately remove *Cryptosporidium* from your drinking water. We have not made this determination by the required date. Our failure to do this may jeopardize our ability to have the required treatment modifications, if any, completed by the required deadline of {date}. For more information, please call {name of water system contact} of {water system name} at {phone number}.

(C) Each special notice must also include a description of what the system is doing to correct the violation and when the system expects to return to compliance or resolve the situation.

(10) Public notification by the Authority. The Authority may give notice to the public required by this section on behalf of the owner or operator of the public water system. However, the owner or operator of the public water system remains legally responsible for ensuring that the requirements of this section are met.

Stat. Auth.: ORS 448.131
Stats. Implemented: ORS 448.131

333-061-0043
Consumer Confidence Reports

This rule establishes the minimum requirements for the content of annual reports that community water systems must deliver to their customers. These reports must contain information on the quality of the water delivered by the systems and characterize the risks (if any) from exposure to contaminants detected in the drinking water in an accurate and understandable manner. For the purpose of this rule, customers are defined as billing units or service connections to which water is delivered by a Community Water System.

(1) Delivery deadlines:
- (a) Community water systems must deliver their reports by July 1, annually. The report must contain data collected during, or prior to, the previous calendar year;
- (b) A new community water system must deliver its first report by July 1 of the year after its first full calendar year in operation and annually thereafter;
- (c) A community water system that sells water to another community water system must deliver the applicable information to the buyer system:
  - (A) No later than April 1, annually; or
  - (B) On a date mutually agreed upon by the seller and the purchaser, and specifically included in a contract between the parties.

(2) Content of the Reports:
- (a) Each community water system must provide to its customers an annual report that contains the information specified in sections (2), (3), (4), and (5) of this rule;
- (b) Each report must identify the source(s) of the water delivered by the community water system by providing information on:
  - (A) The type of water: for example, surface water, ground water; and
  - (B) The commonly used name (if any) and location of the body (or bodies) of water.
- (c) If a source water assessment has been completed, the report must notify consumers of the availability of this information and the means to obtain it. In addition, systems are encouraged to highlight in the report significant potential sources of contamination in the drinking water protection area if they have readily available information. Where a system has received a source water assessment from the Authority, the report must include a brief summary of the system's susceptibility to potential sources of contamination, using language provided by the Authority or written by the operator;
- (d) Each report must contain the following definitions:
  - (A) Maximum Contaminant Level Goal or MCLG: The level of a contaminant in drinking water below which there is no known or expected risk to health. MCLGs allow for a margin of safety;
  - (B) Maximum Contaminant Level or MCL: The highest level of a contaminant that is allowed in drinking water. MCLs are set as close

to the MCLGs as feasible using the best available treatment technology.

(C) Variance: A system operating under a variance as prescribed in OAR 333-061-0045 must include the following definition in its report: Variances: State permission not to meet an MCL or a treatment technique under certain conditions;

(D) Treatment Technique or Action Level: A system which has a detection for a contaminant for which EPA has set a treatment technique or an action level must include one or both of the following definitions as applicable:

(i) Treatment Technique: A required process intended to reduce the level of a contaminant in drinking water;

(ii) Action Level: The concentration of a contaminant which, if exceeded, triggers treatment or other requirements which a water system must follow.

(E) Maximum Residual Disinfectant Level Goal or MRDLG: The level of a drinking water disinfectant below which there is no known or expected risk to health. MRDLGs do not reflect the benefits of the use of disinfectants to control microbial contaminants.

(F) Maximum Residual Disinfectant Level or MRDL: The highest level of disinfectant allowed in drinking water. There is convincing evidence that addition of a disinfectant is necessary for control of microbial contaminants.

(3) Detected Contaminants:

(a) The following information must be included in each report for contaminants subject to mandatory monitoring (except *Cryptosporidium*). Detected means at or above the detection level prescribed by each EPA approved analytical method set forth in 40 CFR 141:

(A) Contaminants and disinfection by-products subject to an MCL, action level, MRDL, or treatment technique (regulated contaminants); and

(B) Unregulated contaminants for which monitoring is required.

(b) The data relating to these contaminants must be displayed in one table or in several adjacent tables. Any additional monitoring results which a community water system chooses to include in its report must be displayed separately.

(c) The data must be derived from data collected to comply with state monitoring and analytical requirements during the calendar year except that where a system is allowed to monitor for regulated contaminants less often than once a year, the table(s) must include the date and results of the most recent sampling and the report must include a brief statement indicating that the data presented in the report are from the most recent testing done in

accordance with the regulation. No data older than five years need be included.

(d) For detected regulated contaminants (listed in Table 39 of this rule), the table(s) in the report must contain:

(A) The MCL for that contaminant expressed as a number equal to or greater than 1.0 (as provided in Table 39);

(B) The MCLG for that contaminant expressed in the same units as the MCL;

(C) If there is no MCL for a detected contaminant, the table must indicate that there is a treatment technique, or specify the action level, applicable to that contaminant, and the report must include the definitions for treatment technique or action level, as appropriate, specified in paragraph (2)(d)(D) of this rule;

(D) For contaminants subject to an MCL, except turbidity and total coliforms and *E. coli*, the highest contaminant level used to determine compliance with these rules and the range of detected levels, as follows:

(i) When compliance with the MCL is determined annually or less frequently: the highest detected level at any sampling point and the range of detected levels expressed in the same units as the MCL;

(ii) When compliance with the MCL is determined by calculating a running annual average of all samples taken at a monitoring location: the highest average at any of the monitoring locations and the range of all monitoring locations must be expressed in the same unit of measure as the MCL. For the MCL for TTHM and HAA5 as specified by OAR 333-061-0030(2)(b), water systems must include the highest locational running annual average for TTHM and HAA5 and the range of individual sample results for all monitoring locations expressed in the same unit of measure as the MCL. If more than one location exceeds the MCL for TTHM or HAA5, the water system must include the locational running annual averages for all locations that exceed the MCL;

(iii) When compliance with the MCL is determined on a system wide basis by calculating a running annual average of all samples at all monitoring locations: the average and range of detections must be expressed in the same units as the MCL. The water system is required to include individual sample results for an IDSE conducted in accordance with OAR 333-061-0036(4)(b) of this rule when determining the range of TTHM and HAA5 results to be reported in the annual consumer

confidence report for the calendar year that the IDSE samples were taken;

(iv) When rounding of results to determine compliance with the MCL is allowed by the regulations, rounding should be done prior to multiplying the results by the factor listed in Table 39 of this rule.

Table 39
Converting MCL Compliance Values For CCRs

Contaminant	MCL in Compliance units (mg/L)	Multiply by	MCL CCR units	MCLG in CCR units
Microbiological Contaminants				
Total Coliform bacteria (until March 31, 2016)	MCL (systems that collect 40 or more samples per month) 5% of monthly samples are positive; (systems that collect fewer than 40 samples per month)1 positive monthly sample.	------	MCL (systems that collect 40 or more samples per month) 5% of monthly samples are positive; (systems that collect fewer than 40 samples per month) 1 positive monthly sample.	0
Total Coliform bacteria (beginning April 1, 2016)	TT	------	TT	N/A
Fecal coliform and *E. coli* (until March 31, 2016)	0	------	0	0
E. coli (beginning April 1, 2016)	Routine and repeat samples are total coliform-positive and either is *E. coli*-positive or the water supplier fails to collect repeat samples following *E. coli*-positive routine sample or system fails to analyze total coliform-positive repeat sample for *E. coli*.	------	Routine and repeat samples are total coliform-positive and either is *E. coli*-positive or the water supplier fails to collect repeat samples following *E. coli*-positive routine sample or system fails to analyze total coliform-positive repeat sample for *E. coli*.	0
Turbidity	------	------	TT (NTU)	n/a
Radioactive Contaminants				
Beta/photon emitters	4 mrem/yr	------	4 mrem/yr	0
Alpha emitters	15 pCi/l	------	15 pCi/l	0
Combined radium	5 pCi/l	------	5 pCi/l	0
Uranium	30 ug/l	------	30 ug/l	0

Inorganic Contaminants

Antimony	0.006	1,000	6ppb	6
Arsenic	0.010	1,000	10 ppb	0
Asbestos	7 MFL	------	7 MFL	7
Barium	2	------	2 ppm	2
Beryllium	0.004	1,000	4 ppb	4
Cadmium	0.005	1,000	5 ppb	5
Chromium	0.1	1,000	100 ppb	100
Copper	AL = 1.3	------	AL = 1.3 ppm	1.3
Cyanide	0.2	1,000	200 ppb	200
Fluoride	4	------	4 ppm	4
Lead	AL = 0.015	1,000	AL = 15 ppb	0
Mercury (inorganic)	0.002	1,000	2 ppb	2
Nitrate (as Nitrogen)	10	------	10 ppm	10
Nitrite (as Nitrogen)	1	------	1 ppm	1
Selenium	0.05	1,000	50 ppb	50
Thallium	0.002	1,000	2 ppb	0.5

Synthetic Organic Contaminants including Pesticides and Herbicides

2,4-D	0.07	1,000	70 ppb	70
2,4,5-TP (Silvex)	0.05	1,000	50 ppb	50
Acrylamide	------	------	TT	0
Alachlor	0.002	1,000	2 ppb	0
Atrazine	0.003	1,000	3 ppb	3
Benzo(a) pyrene (PAH)	0.0002	1,000,000	200 ppt	0
Carbofuran	0.04	1,000	40 ppb	40
Chlordane	0.002	1,000	2 ppb	0
Dalapon	0.2	1,000	200 ppb	200
Di(2-ethylhexyl) adipate	0.4	1,000	400 ppb	400
Di(2-ethylhexyl) phthalate	0.006	1,000	6 ppb	0
Dibromochloropropane	0.0002	1,000,000	200 ppt	0
Dinoseb	0.007	1,000	7 ppb	7
Diquat	0.02	1,000	20 ppb	20
Dioxin (2,3,7,8-TCDD)	0.00000003	1,000,000,000	30 ppq	0
Endothall	0.1	1,000	100 ppb	100
Endrin	0.002	1,000	2 ppb	2
Epichlorohydrin	------	------	TT	0
Ethylene dibromide	0.00005	1,000,000	50 ppt	0
Glyphosate	0.7	1,000	700 ppb	700
Heptachlor	0.0004	1,000,000	400 ppt	0
Heptachlor epoxide	0.0002	1,000,000	200 ppt	0
Hexachlorobenzene	0.001	1,000	1 ppb	0
Hexachlorocyclo- pentadiene	0.05	1,000	50 ppb	50
Lindane	0.0002	1,000,000	200 ppt	200
Methoxychlor	0.04	1,000	40 ppb	40
Oxamyl (Vydate)	0.2	1,000	200 ppb	200

PCBs (polychlorinated (biphenyls)	0.0005	1,000,000	500 ppt	0
Pentachlorohpenol	0.001	1,000	1 ppb	0
Picloram	0.5	1,000	500 ppb	500
Simazine	0.004	1,000	4 ppb	4
Toxaphene	0.003	1,000	3 ppb	0

Volatile Organic Contaminants

Benzene	0.005	1,000	5 ppb	0
Carbon Tetrachloride	0.005	1,000	5 ppb	0
Chlorobenzene	0.1	1,000	100 ppb	100
o-Dichlorobenzene	0.6	1,000	600 ppb	600
p-Dichlorobenzene	0.075	1,000	75 ppb	75
1,2-Dichloroethane	0.005	1,000	5 ppb	0
1,1-Dichloroethylene	0.007	1,000	7 ppb	7
cis-1,2-Dichloroethylene	0.07	1,000	70 ppb	70
trans-1,2-Dichloroethylene	0.1	1,000	100 ppb	100
Dichloromethane	0.005	1,000	5 ppb	0
1,2-Dichloropropane	0.005	1,000	5 ppb	0
Ethylbenzene	0.7	1,000	700 ppb	700
Styrene	0.1	1,000	100 ppb	100
Tetrachloroethylene	0.005	1,000	5 ppb	0
1,2,4-Trichlorobenzene	0.07	1,000	70 ppb	70
1,1,1-Trichloroethane	0.2	1,000	200 ppb	200
1,1,2-Trichloroethane	0.005	1,000	5 ppb	3
Trichloroethylene	0.005	1,000	5 ppb	0
Toluene	1	------	1 ppm	1
Vinyl Chloride	0.002	1,000	2 ppb	0
Xylenes	10	------	10 ppm	10

Disinfection Byproducts, Byproduct Precursors, and Disinfectant Residuals

TTHMs (Total Trihalomethanes	.080	1,000	80 ppb	NA
Haloacetic Acids (HAA)	060	1,000	60 ppb	NA
Bromate	010	1,000	10 ppb	0
Chlorite	1	---------	1 ppm	0.8
Chlorine	MRDL= 4.0	---------	MRDL= 4.0 ppm	4 (MRDLG)
Chloramines	MRDL= 4.0	---------	MRDL= 4.0 ppm	4 (MRDLG)
Chlorine Dioxide	MRDL =0.8	1,000	MRDL= 800 ppb	800(MRDLG)
Total Organic Carbon (TOC)	TT	---------	TT	NA

Key:
AL=Action Level
GWR=Ground Water Rule
MCL=Maximum Contaminant Level
MCLG=Maximum Contaminant Level Goal
MFL=million fibers per liter
mrem/year=Millirems per year (a measure of the radiation absorbed by the body)
NTU=Nephelometric Turbidity Units
pCi/l=picocuries per liter (a measure of radioactivity)
ppm=parts per million or milligrams/liter (mg/l)

ppb=parts per billion or micrograms/liter (ug/l)
ppt=parts per trillion or nanograms/liter
ppq=parts per quadrillion, or picograms/liter
TT=Treatment Technique

(e) Turbidity:
  (A) When it is reported pursuant to OAR 333-061-0030(3)(a), 333-061-0032(2), and 333-061-0036(5)(a): the highest monthly value. The report should include an explanation of the reasons for measuring turbidity. This includes water systems currently without filtration treatment, but required to install filtration through a Notice of Violation and Remedial Order.
  (B) When it is reported pursuant to OAR 333-061-0030(3): The highest single measurement and the lowest monthly percentage of samples meeting the turbidity limits specified in OAR 333-061-0030(3) for the filtration technology being used. The report should include an explanation of the reasons for measuring turbidity.

(f) Lead and copper: the 90th percentile value of the most recent round of sampling and the number of sampling sites exceeding the action level and the lead-specific information as prescribed in subsection (4)(c) of this rule.

(g) For total coliform until March 31, 2016:
  (A) The highest monthly number of positive samples for systems collecting fewer than 40 samples per month; or
  (B) The highest monthly percentage of positive samples for systems collecting at least 40 samples per month.

(h) For *E. coli*: the total number of positive samples.

(i) Reports that contain information regarding level 1 or level 2 coliform investigations required as specified in OAR 333-061-0078 must include the following definitions as applicable:
  (A) "Level 1 Coliform Investigation" means a study of the water system to identify potential problems and determine (if possible) why total coliform bacteria have been found in our water system.
  (B) "Level 2 Coliform Investigation" means a very detailed study of the water system to identify potential problems and determine (if possible) why an *E. coli* MCL violation has occurred or why total coliform bacteria have been found in our water system on multiple occasions.

(j) The likely source(s) of detected contaminants to the best of the operator's knowledge. Specific information regarding contaminants may be available in sanitary surveys and source water assessments, and should be used when available to the operator. If the operator lacks specific information on the likely source, the report must include one or more of the typical sources for that contaminant listed in Table 40 which are most applicable to the system.

(k) If a community water system distributes water to its customers from multiple hydraulically independent distribution systems that are fed by different raw water sources, the table should contain a separate column for each service area and the report should identify each separate distribution system. Alternatively, systems could produce separate reports tailored to include data for each service area.

(l) The table(s) must clearly identify any data indicating violations of MCLs, MRDLs, or treatment techniques and the report must contain a clear and readily understandable explanation of the violation, the length of the violation, the potential adverse health effects, and actions taken by the system to address the violation. To describe the potential health effects, the system must use the relevant language in Table 40 of this rule.

(m) For detected unregulated contaminants for which monitoring is required (except *Cryptosporidium*), the table(s) must contain the average and range at which the contaminant was detected. The report may include a brief explanation of the reasons for monitoring for unregulated contaminants.

(n) Information on *Cryptosporidium*, radon, and other contaminants:

(A) If the system has performed any monitoring for *Cryptosporidium*, which indicates that *Cryptosporidium* may be present in the source water or the finished water, the report must include:

(i) A summary of the results of the monitoring, and

(ii) An explanation of the significance of the results.

(B) If the system has performed any monitoring for radon which indicates that radon may be present in the finished water, the report must include:

(i) The results of the monitoring; and

(ii) An explanation of the significance of the results.

(C) If the system has performed additional monitoring which indicates the presence of other contaminants in the finished water, the system is strongly encouraged to report any results which may indicate a health concern. To determine if results may indicate a health concern, EPA recommends that systems find out if EPA has proposed a National Primary Drinking Water Regulation or issued a health advisory for that contaminant by calling the Safe Drinking Water Hotline (800-426-4791). EPA considers detects above a proposed MCL or health advisory level to indicate possible health concerns. For such contaminants, EPA recommends that the report include:

(i) The results of the monitoring; and

(ii) An explanation of the significance of the results noting the existence of a health advisory or a proposed regulation.

Table 40

Regulated Contaminant Information				
Contaminant (units)	MCL	MCLG	Major Sources in Drinking Water	Health Effects Language
Microbiological Contaminants				
Total Coliform Bacteria	TT	N/A	Naturally present in the environment.	Coliforms are bacteria that are naturally present in the environment and are used as an indicator that other, potentially harmful, waterborne pathogens may be present or that a potential pathway exists through which contamination may enter the drinking water distribution system. We found coliforms indicating the need to look for potential problems in water treatment or distribution. When this occurs, we are required to conduct investigation(s) to identify problems and to correct any problems that were found during these investigations.
E. coli	Routine and repeat samples are total coliform-positive and either is E. coli-positive or system fails to take repeat samples following E. coli-positive routine sample or system fails to analyze total coliform-positive repeat sample for E. coli.	0	Human and animal fecal waste.	E. coli are bacteria whose presence indicates that the water may be contaminated with human or animal wastes. Human pathogens in these wastes can cause short-term effects, such as diarrhea, cramps, nausea, headaches, or other symptoms. They may pose a greater health risk for infants, young children, the elderly, and people with severely-compromised immune systems.

Regulated Contaminant Information				
Contaminant (units)	MCL	MCLG	Major Sources in Drinking Water	Health Effects Language
Turbidity	TT	n/a	Soil runoff.	Turbidity has no health effects. However, turbidity can interfere with disinfection and provide a medium for microbial growth. Turbidity may indicate the presence of disease causing organisms. These organisms include bacteria, viruses, and parasites which can cause symptoms such as nausea, cramps, diarrhea and associated headaches.
Radioactive Contaminants				
Beta/photon emitters (mrem/yr)	4	0	Decay of natural and man-made deposits.	Certain minerals are radioactive and may emit forms of radiation known as photons and beta radiation. Some people who drink water containing beta and photon emitters in excess of the MCL over many years may have an increased risk of getting cancer.
Alpha emitters (pCi/l)	15	0	Erosion of natural deposits.	Certain minerals are radioactive and may emit a form of radiation known as alpha radiation. Some people who drink water containing alpha emitters in excess of the MCL over many years may have an increased risk of getting cancer.
Combined radium (pCi/l)	5	0	Erosion of natural deposits.	Some people who drink water containing radium 226 or 228 in excess of the MCL over many years may have an increased risk of getting cancer.

Regulated Contaminant Information				
Contaminant (units)	MCL	MCLG	Major Sources in Drinking Water	Health Effects Language
Uranium (ug/l)	30	0	Erosion of natural deposits	Some people who drink water containing uranium in excess of the MCL over many years may have an increased risk of getting cancer and kidney toxicity.
Inorganic Contaminants				
Antimony (ppb)	6	6	Discharge from petroleum refineries; fire retardants; ceramics; electronics; solder.	Some people who drink water containing antimony well in excess of the MCL over many years could experience increases in blood cholesterol and decreases in blood sugar.
Arsenic (ppb)	10	0	Erosion of natural deposits; Runoff from orchards; Runoff from glass and electronics production wastes.	Some people who drink water containing arsenic in excess of the MCL over many years could experience skin damage or problems with their circulatory system, and may have an increased risk of getting cancer.
Asbestos (MFL)	7	7	Decay of asbestos cement water mains; Erosion of natural deposits.	Some people who drink water containing asbestos in excess of the MCL over many years may have an increased risk of developing benign intestinal polyps.
Barium (ppm)	2	2	Discharge of drilling wastes; Discharge from metal refineries; Erosion of natural deposits.	Some people who drink water containing barium in excess of the MCL over many years could experience an increase in their blood pressure.
Beryllium (ppb)	4	4	Discharge from metal refineries and coal-burning factories; Discharge from electrical,	Some people who drink water containing beryllium well in excess of the MCL over many years could develop intestinal lesions.

Regulated Contaminant Information				
Contaminant (units)	MCL	MCLG	Major Sources in Drinking Water	Health Effects Language
			aerospace, and defense industries.	
Cadmium (ppb)	5	5	Corrosion of galvanized pipes; Erosion of natural deposits; Discharge from metal refineries; runoff from waste batteries and paints.	Some people who drink water containing cadmium in excess of the MCL over many years could experience kidney damage.
Chromium (ppb)	100	100	Discharge from steel and pulp mills; Erosion of natural deposits.	Some people who use water containing chromium well in excess of the MCL over many years could experience allergic dermatitis.
Copper (ppm)	AL=1.3	1.3	Corrosion of household plumbing systems; Erosion of natural deposits; Leaching from wood preservatives.	Copper is an essential nutrient, but some people who drink water containing copper in excess of the action level over a relatively short amount of time could experience gastrointestinal distress. Some people who drink water containing copper in excess of the action level over many years could suffer liver or kidney damage. People with Wilson's Disease should consult their personal doctor.
Cyanide (ppb)	200	200	Discharge from steel/metal factories; Discharge from plastic and fertilizer factories.	Some people who drink water containing cyanide well in excess of the MCL over many years could experience nerve damage or problems with their thyroid.
Fluoride (ppm)	4	4	Erosion of natural deposits; Water additive which promotes strong	Some people who drink water containing fluoride in excess of the MCL over many years could get

Regulated Contaminant Information				
Contaminant (units)	MCL	MCLG	Major Sources in Drinking Water	Health Effects Language
			teeth; Discharge from fertilizer and aluminum factories.	bone disease, including pain and tenderness of the bones. Fluoride in drinking water at half the MCL or more may cause mottling of children's teeth, usually in children less than nine years old. Mottling, also known as dental fluorosis, may include brown staining or pitting of the teeth, and occurs only in developing teeth before they erupt from the gums.
Lead (ppb)	AL=15	0	Corrosion of household plumbing systems; Erosion of natural deposits.	Infants and children who drink water containing lead in excess of the action level could experience delays in their physical or mental development. Children could show slight deficits in attention span and learning abilities. Adults who drink this water over many years could develop kidney problems or high blood pressure.
Mercury (inorganic)(ppb)	2	2	Erosion of natural deposits; Discharge from refineries and factories; Runoff from landfills; Runoff from cropland.	Some people who drink water containing inorganic mercury well in excess of the MCL over many years could experience kidney damage.
Nitrate (as Nitrogen)(ppm)	10	10	Runoff from fertilizer use; Leaching from septic tanks, sewage; Erosion of natural deposits.	Infants below the age of 6 months who drink water containing nitrate in excess of the MCL could become seriously ill and, if untreated, may die. Symptoms include

Regulated Contaminant Information				
Contaminant (units)	MCL	MCLG	Major Sources in Drinking Water	Health Effects Language
				shortness of breath and blue baby syndrome.
Nitrite (as Nitrogen)(ppm)	1	1	Runoff from fertilizer use; Leaching from septic tanks, sewage; Erosion of natural deposits.	Infants below the age of 6 months who drink water containing nitrite in excess of the MCL could become seriously ill and, if untreated, may die. Symptoms include shortness of breath and blue baby syndrome.
Selenium (ppb)	50	50	Discharge from petroleum and metal refineries; Erosion of natural deposits; Discharge from mines.	Selenium is an essential nutrient. However, some people who drink water containing selenium in excess of the MCL over many years could experience hair or fingernail losses, numbness in fingers or toes, or problems with their circulation.
Thallium (ppb)	2	0.5	Leaching from ore-processing sites; Discharge from electronics, glass, and drug factories.	Some people who drink water containing thallium in excess of the MCL over many years could experience hair loss, changes in their blood, or problems with their kidneys, intestines, or liver.
Synthetic Organic Contaminants including Pesticides and Herbicides				

Regulated Contaminant Information				
Contaminant (units)	MCL	MCLG	Major Sources in Drinking Water	Health Effects Language
2,4-D (ppb)	70	70	Runoff from herbicide used on row crops.	Some people who drink water containing the weed killer 2,4-D well in excess of the MCL over many years could experience problems with their kidneys, liver, or adrenal glands.
2,4,5-TP [Silvex](ppb)	50	50	Residue of banned herbicide.	Some people who drink water containing silvex in excess of the MCL over many years could experience liver problems.
Acrylamide	TT	0	Added to water during sewage/ wastewater treatment.	Some people who drink water containing high levels of acrylamide over a long period of time could have problems with their nervous system or blood, and may have an increased risk of getting cancer.
Alachlor (ppb)	2	0	Runoff from herbicide used on row crops.	Some people who drink water containing alachlor in excess of the MCL over many years could have problems with their eyes, liver, kidneys, or spleen, or experience anemia, and may have an increased risk of getting cancer.
Atrazine (ppb)	3	3	Runoff from herbicide used on row crops.	Some people who drink water containing atrazine well in excess of the MCL over many years could experience problems with their cardiovascular system or reproductive difficulties.
Benzo(a) pyrene [PAH] (nanograms/l)	200	0	Leaching from linings of water storage tanks and distribution lines.	Some people who drink water containing benzo(a) pyrene in excess of the MCL over many years may experience reproductive difficulties

Regulated Contaminant Information				
Contaminant (units)	MCL	MCLG	Major Sources in Drinking Water	Health Effects Language
				and may have an increased risk of getting cancer.
Carbofuran (ppb)	40	40	Leaching of soil fumigant used on rice and alfalfa.	Some people who drink water containing carbofuran in excess of the MCL over many years could experience problems with their blood, or nervous or reproductive systems.
Chlordane (ppb)	2	0	Residue of banned termiticide.	Some people who drink water containing chlordane in excess of the MCL over many years could experience problems with their liver, or nervous system, and may have an increased risk of getting cancer.
Dalapon (ppb)	200	200	Runoff from herbicide used on rights of way.	Some people who drink water containing dalapon well in excess of the MCL over many years could experience minor kidney changes.
Di(2-ethylhexyl) adipate (ppb)	400	400	Discharge from chemical factories.	Some people who drink water containing di-(2-ethylhexyl) adipate well in excess of the MCL over many years could experience toxic effects such as weight loss, liver enlargement or possible reproductive difficulties.
Di(2-ethylhexyl) phthalate (ppb)	6	0	Discharge from rubber and chemical factories.	Some people who drink water containing di-(2-ethylhexyl) phthalate well in excess of the MCL over many years may have problems with their liver, or experience reproductive difficulties, and may have an increased risk of getting cancer.

Regulated Contaminant Information				
Contaminant (units)	MCL	MCLG	Major Sources in Drinking Water	Health Effects Language
Dibromochloro-propane (DBCP)(ppt)	200	0	Runoff/leaching from soil fumigant used on soybeans, cotton, pineapples, and orchards.	Some people who drink water containing DBCP in excess of the MCL over many years could experience reproductive difficulties and may have an increased risk of getting cancer.
Dinoseb (ppb)	7	7	Runoff from herbicide used on soybeans and vegetables.	Some people who drink water containing dinoseb well in excess of the MCL over many years could experience reproductive difficulties.
Diquat (ppb)	20	20	Runoff from herbicide use.	Some people who drink water containing diquat in excess of the MCL over many years could get cataracts.
Dioxin [2,3,7,8-TCDD] (ppq)	30	0	Emissions from waste incineration and other combustion; Discharge from chemical factories.	Some people who drink water containing dioxin in excess of the MCL over many years could experience reproductive difficulties and may have an increased risk of getting cancer.
Endothall (ppb)	100	100	Runoff from herbicide use.	Some people who drink water containing endothall in excess of the MCL over many years could experience problems with their stomach or intestines.
Endrin (ppb)	2	2	Residue of banned insecticide.	Some people who drink water containing endrin in excess of the MCL over many years could experience liver problems.
Epichlorohydrin	TT	0	Discharge from industrial chemical factories; An impurity of some	Some people who drink water containing high levels of epichlorohydrin over a long period of time could experience stomach problems, and may have

Regulated Contaminant Information				
Contaminant (units)	MCL	MCLG	Major Sources in Drinking Water	Health Effects Language
			water treatment chemicals.	an increased risk of getting cancer.
Ethylene dibromide (ppt)	50	0	Discharge from petroleum refineries.	Some people who drink water containing ethylene dibromide in excess of the MCL over many years could experience problems with their liver, stomach, reproductive system, or kidneys, and may have an increased risk of getting cancer.
Glyphosate (ppb)	700	700	Runoff from herbicide use.	Some people who drink water containing glyphosate in excess of the MCL over many years could experience problems with their kidneys or reproductive difficulties.
Heptachlor (ppt)	400	0	Residue of banned termiticide.	Some people who drink water containing heptachlor in excess of the MCL over many years could experience liver damage and may have an increased risk of getting cancer.
Heptachlor epoxide (ppt)	200	0	Breakdown of heptachlor.	Some people who drink water containing heptachlor epoxide in excess of the MCL over many years could experience liver damage, and may have an increased risk of getting cancer.
Hexachlorobenzene (ppb)	1	0	Discharge from metal refineries and agricultural chemical factories.	Some people who drink water containing hexachlorobenzene in excess of the MCL over many years could experience problems with their liver or kidneys, or adverse reproductive

Regulated Contaminant Information				
Contaminant (units)	MCL	MCLG	Major Sources in Drinking Water	Health Effects Language
				effects, and may have an increased risk of getting cancer.
Hexachlorocyclopentadiene (ppb)	50	50	Discharge from chemical factories.	Some people who drink water containing hexachlorocyclo-pentadiene well in excess of the MCL over many years could experience problems with their stomach or kidneys.
Lindane (ppt)	200	200	Runoff/leaching from insecticide used on cattle, lumber, gardens.	Some people who drink water containing lindane in excess of the MCL over many years could experience problems with their kidneys or liver.
Methoxychlor (ppb)	40	40	Runoff/leaching from insecticide used on fruits, vegetables, alfalfa, livestock.	Some people who drink water containing methoxychlor in excess of the MCL over many years could experience reproductive difficulties.
Oxamyl [Vydate](ppb)	200	200	Runoff/leaching from insecticide used on apples, potatoes and tomatoes.	Some people who drink water containing oxamyl in excess of the MCL over many years could experience slight nervous system effects.
PCBs [Polychlorinated biphenyls] (ppt)	500	0	Runoff from landfills; Discharge of waste chemicals.	Some people who drink water containing PCBs in excess of the MCL over many years could experience changes in their skin, problems with their thymus gland, immune deficiencies, or reproductive or nervous system difficulties, and may have an increased risk of getting cancer.
Pentachlorophenol (ppb)	1	0	Discharge from wood preserving factories.	Some people who drink water containing pentachlorophenol in excess of the MCL over

Regulated Contaminant Information				
Contaminant (units)	MCL	MCLG	Major Sources in Drinking Water	Health Effects Language
				many years could experience problems with their liver or kidneys, and may have an increased risk of getting cancer.
Picloram (ppb)	500	500	Herbicide runoff.	Some people who drink water containing picloram in excess of the MCL over many years could experience problems with their liver.
Simazine (ppb)	4	4	Herbicide runoff.	Some people who drink water containing simazine in excess of the MCL over many years could experience problems with their blood.
Toxaphene (ppb)	3	0	Runoff/leaching from insecticide used on cotton and cattle.	Some people who drink water containing toxaphene in excess of the MCL over many years could have problems with their thyroid, kidneys, or liver and may have an increased risk of getting cancer.
Volatile Organic Contaminants				
Benzene (ppb)	5	0	Discharge from factories; Leaching from gas storage tanks and landfills.	Some people who drink water containing benzene in excess of the MCL over many years could experience anemia or a decrease in blood platelets, and may have an increased risk of getting cancer.
Carbon tetrachloride (ppb)	5	0	Discharge from chemical plants and other industrial activities.	Some people who drink water containing carbon tetrachloride in excess of the MCL over many years could experience problems with their liver and may have an

Regulated Contaminant Information				
Contaminant (units)	MCL	MCLG	Major Sources in Drinking Water	Health Effects Language
				increased risk of getting cancer.
Chlorobenzene (ppb)	100	100	Discharge from chemical and agricultural chemical factories.	Some people who drink water containing chlorobenzene in excess of the MCL over many years could experience problems with their kidneys or liver.
o-Dichlorobenzene (ppb)	600	600	Discharge from industrial chemical factories.	Some people who drink water containing *o*-dichlorobenzene well in excess of the MCL over many years could experience problems with their liver, kidneys, or circulatory systems.
p-Dichlorobenzene (ppb)	75	75	Discharge from industrial chemical factories.	Some people who drink water containing *p*-dichlorobenzene in excess of the MCL over many years could experience anemia, damage to their liver, kidneys, or spleen, or changes in their blood.
1,2-Dichloroethane (ppb)	5	0	Discharge from industrial chemical factories.	Some people who drink water containing 1,2-dichloroethane in excess of the MCL over many years may have an increased risk of getting cancer.
1,1-Dichloroethylene (ppb)	7	7	Discharge from industrial chemical factories.	Some people who drink water containing 1,1-dichloroethylene in excess of the MCL over many years could experience problems with their liver.
cis-1,2-Dichloroethylene (ppb)	70	70	Discharge from industrial chemical factories.	Some people who drink water containing *cis*-1,2-dichloroethylene in excess of the MCL over many years could experience problems with their liver.

Regulated Contaminant Information				
Contaminant (units)	MCL	MCLG	Major Sources in Drinking Water	Health Effects Language
trans-1,2-Dichloroethylene (ppb)	100	100	Discharge from industrial chemical factories.	Some people who drink water containing *trans*-1,2-dichloroethylene well in excess of the MCL over many years could experience problems with their liver.
Dichloromethane (ppb)	5	0	Discharge from pharmaceutical and chemical factories.	Some people who drink water containing dichloromethane in excess of the MCL over many years could have liver problems and may have an increased risk of getting cancer.
1,2-Dichloropropane (ppb)	5	0	Discharge from industrial chemical factories.	Some people who drink water containing 1,2-dichloropropane in excess of the MCL over many years may have an increased risk of getting cancer.
Ethylbenzene (ppb)	700	700	Discharge from petroleum refineries.	Some people who drink water containing ethylbenzene well in excess of the MCL over many years could experience problems with their liver or kidneys.
Styrene (ppb)	100	100	Discharge from rubber and plastic factories; Leaching from landfills.	Some people who drink water containing styrene well in excess of the MCL over many years could have problems with their liver, kidneys, or circulatory system.
Tetrachloroethylene (ppb)	5	0	Discharge from factories and dry cleaners.	Some people who drink water containing tetrachloroethylene in excess of the MCL over many years could have problems with their liver, and may have an increased risk of getting cancer.

Regulated Contaminant Information				
Contaminant (units)	MCL	MCLG	Major Sources in Drinking Water	Health Effects Language
1,2,4-Trichlorobenzene (ppb)	70	70	Discharge from textile-finishing factories.	Some people who drink water containing 1,2,4-trichlorobenzene well in excess of the MCL over many years could experience changes in their adrenal glands.
1,1,1-Trichloroethane (ppb)	200	200	Discharge from metal degreasing sites and other factories.	Some people who drink water containing 1,1,1-trichloroethane in excess of the MCL over many years could experience problems with their liver, nervous system, or circulatory system.
1,1,2-Trichloroethane (ppb)	5	3	Discharge from industrial chemical factories.	Some people who drink water containing 1,1,2-trichloroethane well in excess of the MCL over many years could have problems with their liver, kidneys, or immune systems.
Trichloroethylene (ppb)	5	0	Discharge from metal degreasing sites and other factories.	Some people who drink water containing trichloroethylene in excess of the MCL over many years could experience problems with their liver and may have an increased risk of getting cancer.
Toluene (ppm)	1	1	Discharge from petroleum factories.	Some people who drink water containing toluene well in excess of the MCL over many years could have problems with their nervous system, kidneys, or liver.
Vinyl Chloride (ppb)	2	0	Leaching from PVC piping; Discharge from plastics factories.	Some people who drink water containing vinyl chloride in excess of the MCL over many years may have an increased risk of getting cancer.

Regulated Contaminant Information				
Contaminant (units)	MCL	MCLG	Major Sources in Drinking Water	Health Effects Language
Xylenes (ppm)	10	10	Discharge from petroleum factories; Discharge from chemical factories.	Some people who drink water containing xylenes in excess of the MCL over many years could experience damage to their nervous system.
Disinfection Byproducts, Byproduct Precursors, and Disinfectant Residuals				
Total trihalomethanes (TTHMs)(ppb)	80	N/A	Byproduct of drinking water disinfection	Some people who drink water containing trihalomethanes in excess of the MCL over many years may experience problems with their liver, kidneys, or central nervous system, and may have an increased risk of getting cancer
Haloacetic Acids (HAA) (ppb)	60	N/A	Byproduct of drinking water disinfection	Some people who drink water containing haloacetic acids in excess of the MCL over many years may have an increased risk of getting cancer.
Bromate (ppb)	10	0	Byproduct of drinking water disinfection	Some people who drink water containing bromate in excess of the MCL over many years may have an increased risk of getting cancer.
Chlorite (ppm)	1	0.8	Byproduct of drinking water disinfection	Some infants and young children who drink water containing chlorite in excess of the MCL could experience nervous system effects. Similar effects may occur in fetuses of pregnant women who drink water containing chlorite in excess of the MCL. Some people may experience anemia.

Regulated Contaminant Information				
Contaminant (units)	MCL	MCLG	Major Sources in Drinking Water	Health Effects Language
Chlorine (ppm)	MRDL =4.0	MRDLG = 4	Water additive used to control microbes	Some people who use water containing chlorine well in excess of the MRDL could experience irritating effects to their eyes and nose. Some people who drink water containing chlorine well in excess of the MRDL could experience stomach discomfort.
Chloramines (ppm)	MRDL =4.0	MRDLG = 4	Water additive used to control microbes	Some people who use water containing chloramines well in excess of the MRDL could experience irritating effects to their eyes and nose. Some people who drink water containing chloramines well in excess of the MRDL could experience stomach discomfort or anemia.
Chlorine dioxide (ppb)	MRDL=800	MRDLG =800	Water additive used to control microbes	Some infants and young children who drink water containing chlorine dioxide in excess of the MRDL could experience nervous system effects. Similar effects may occur in fetuses of pregnant women who drink water containing chlorine dioxide in excess of the MRDL. Some people may experience anemia.
Total Organic Carbon (TOC) (ppm)	TT	None	Naturally present in the environment	Total Organic Carbon (TOC) has no health effects, however, TOC provides a medium for the formation of disinfection byproducts (DBPs). These byproducts include trihalomethanes (THMs) and haloacetic acids

Regulated Contaminant Information				
Contaminant (units)	MCL	MCLG	Major Sources in Drinking Water	Health Effects Language
				(HAAs). Drinking water containing these byproducts in excess of the MCL may lead to adverse health effects, liver or kidney problems, or nervous system effects, and may lead to an increased risk of getting cancer.

Key:
AL=Action Level
MCL=Maximum Contaminant Level
MCLG=Maximum Contaminant Level Goal
MFL=million fibers per liter
mrem/year=millirems per year (a measure of radiation absorbed by the body)
NTU=Nephelometric Turbidity Units
pCi/l=picocuries per liter (a measure of radioactivity)
ppm=parts per million, or milligrams per liter (mg/l)
ppb=parts per billion, or micrograms per liter (ug/l)
ppt=parts per trillion, or nanograms per liter
ppq=parts per quadrillion, or picograms per liter
TT=Treatment Technique

(o) Compliance with OAR 333-061: In addition to subsection (3)(k) of this rule, the report must note any violation that occurred during the year covered by the report of a requirement listed below, and include a clear and readily understandable explanation of the violation, any potential adverse health effects, and the steps the system has taken to correct the violation.

(A) Monitoring and reporting of compliance data;

(B) Filtration and disinfection prescribed by OAR 333-061-0032: For systems which have failed to install adequate filtration or disinfection equipment or processes which constitutes a violation or have an equipment failure constituting a violation, the report must include the following language as part of the explanation of potential adverse health effects: Inadequately treated water may contain disease-causing organisms. These organisms include bacteria, viruses, and parasites which can cause symptoms such as nausea, cramps, diarrhea, and associated headaches;

(C) Lead and copper control requirements: For systems which fail to take one or more actions prescribed by OAR 333-061-0034 the report must

include the applicable language in Table 40 of this rule for lead, copper, or both;

(D) Treatment techniques for Acrylamide and Epichlorohydrin: For systems which violate the requirements of OAR 333-061-0030(7), the report must include the relevant health effects language in Table 40 of this rule.

(E) Recordkeeping of compliance data;

(F) Special monitoring requirements prescribed by OAR 333-061-0036(2)(f) and for unregulated contaminants as required by EPA;

(G) Violation of the terms of a variance, administrative order or judicial order.

(p) Variances: If a system is operating under the terms of a variance as prescribed in OAR 333-061-0045, the report must contain:

(A) An explanation of the reasons for the variance;

(B) The date on which the variance was issued;

(C) A brief status report on the steps the system is taking to install treatment, find alternative sources of water, or otherwise comply with the terms and schedules of the variance; and

(D) A notice of any opportunity for public input in the review, or renewal, of the variance.

(q) Additional information:

(A) The report must contain a brief explanation regarding contaminants which may reasonably be expected to be found in drinking water including bottled water. This explanation may include the language in subparagraphs (3)(q)(A)(i), (ii) and (iii) of this rule, or systems may use their own comparable language. The report also must include the language of subparagraph (3)(q)(A)(iv) of this rule.

(i) The sources of drinking water (both tap water and bottled water) include rivers, lakes, streams, ponds, reservoirs, springs, and wells. As water travels over the surface of the land or through the ground, it dissolves naturally-occurring minerals and, in some cases, radioactive material, and can pick up substances resulting from the presence of animals or from human activity;

(ii) Contaminants that may be present in source water include:

(I) Microbial contaminants, such as viruses and bacteria, which may come from sewage treatment plants, septic systems, agricultural livestock operations, and wildlife;

(II) Inorganic contaminants, such as salts and metals, which can be naturally-occurring or result from urban stormwater runoff, industrial or domestic wastewater discharges, oil and gas production, mining, or farming;

(III) Pesticides and herbicides, which may come from a variety of sources such as agriculture, urban stormwater runoff, and residential uses;

(IV) Organic chemical contaminants, including synthetic and volatile organic chemicals, which are by-products of industrial processes and petroleum production, and can also come from gas stations, urban stormwater runoff, and septic systems;

(V) Radioactive contaminants, which can be naturally-occurring or be the result of oil and gas production and mining activities.

(iii) In order to ensure that tap water is safe to drink, EPA prescribes regulations which limit the amount of certain contaminants in water provided by public water systems. FDA regulations establish limits for contaminants in bottled water which must provide the same protection for public health;

(iv) Drinking water, including bottled water, may reasonably be expected to contain at least small amounts of some contaminants. The presence of contaminants does not necessarily indicate that water poses a health risk. More information about contaminants and potential health effects can be obtained by calling the Environmental Protection Agency's Safe Drinking Water Hotline (800-426-4791).

(B) The report must include the telephone number of the owner, operator, or designee of the community water system as a source of additional information concerning the report;

(C) In communities with a large proportion of non-English speaking residents the report must contain information in the appropriate language(s) regarding the importance of the report or contain a telephone number or address where such residents may contact the system to obtain a translated copy of the report or assistance in the appropriate language;

(D) The report must include information (for example, time and place of regularly scheduled board meetings) about opportunities for public participation in decisions that may affect the quality of the water;

(E) The systems may include such additional information as they deem necessary for public education consistent with, and not detracting from, the purpose of the report.

(4) Required additional health information:

(a) All reports must prominently display the following language: Some people may be more vulnerable to contaminants in drinking water than the general population. Immuno-compromised persons such as persons with cancer

undergoing chemotherapy, persons who have undergone organ transplants, people with HIV/AIDS or other immune system disorders, some elderly, and infants can be particularly at risk from infections. These people should seek advice about drinking water from their health care providers. EPA/CDC guidelines on appropriate means to lessen the risk of infection by *Cryptosporidium* and other microbial contaminants are available from the Safe Drinking Water Hotline (800-426-4791).

(b) A system which detects nitrate at levels above 5 mg/l, but does not exceed the MCL:

(A) Must include a short informational statement about the impacts of nitrate on children using language such as: Nitrate in drinking water at levels above 10 mg/l is a health risk for infants of less than six months of age. High nitrate levels in drinking water can cause blue baby syndrome. Nitrate levels may rise quickly for short periods of time because of rainfall or agricultural activity. If you are caring for an infant you should ask advice from your health care provider.

(B) May write its own educational statement, but only in consultation with the Authority.

(c) Every report must include the following lead-specific information:

(A) A short informational statement about the lead in drinking water and its effects on children. The statement must include the following information: If present, elevated levels of lead can cause serious health problems, especially for pregnant women and young children. Lead in drinking water is primarily from materials and components associated with service lines and home plumbing. {NAME OF WATER UTILITY} is responsible for providing high quality drinking water, but cannot control the variety of materials used in plumbing components. When your water has been sitting for several hours, you can minimize the potential for lead exposure by flushing your tap for 30 seconds to 2 minutes before using water for drinking or cooking. If you are concerned about lead in your water, you may wish to have your water tested. Information on lead in drinking water, testing methods, and steps you can take to minimize exposure is available from the Safe Drinking Water Hotline or at http://www.epa.gov/safewater/lead.

(B) The water system may write its own educational statement, but only in consultation with the Authority.

(d) Requirements related to coliform investigations as specified in OAR 333-061-0078.

(A) A water supplier required to comply with any requirement related to level one or level two coliform investigations that are not due to an exceedance of the MCL for *E. coli* must include in the report the text

found in subparagraphs (4)(d)(A)(i) through (iii) of this rule as appropriate, replacing the language in brackets with system specific information as appropriate.

(i) Coliforms are bacteria that are naturally present in the environment and are used as an indicator that other, potentially harmful, waterborne pathogens may be present or that a potential pathway exists through which contamination may enter the drinking water distribution system. We found coliforms indicating the need to look for potential problems in water treatment or distribution. When this occurs, we are required to conduct investigation(s) to identify problems and to correct any problems that were found during these investigation(s).

(ii) During the past year we were required to conduct [INSERT NUMBER OF LEVEL 1 COLIFORM INVESTIGATIONS] level 1 coliform investigation(s). [INSERT NUMBER OF LEVEL 1 COLIFORM INVESTIGATIONS] level 1 coliform investigation (s) were completed. In addition, we were required to take [INSERT NUMBER OF CORRECTIVE ACTIONS] corrective actions and we completed [INSERT NUMBER OF CORRECTIVE ACTIONS] of these actions.

(iii) During the past year [INSERT NUMBER OF LEVEL 2 COLIFORM INVESTIGATIONS] level 2 coliform investigations were required to be completed for our water system. [INSERT NUMBER OF LEVEL 2 COLIFORM INVESTIGATIONS] level 2 coliform investigations were completed. In addition, we were required to take [INSERT NUMBER OF CORRECTIVE ACTIONS] corrective actions and we completed [INSERT NUMBER OF CORRECTIVE ACTIONS] of these actions.

(B) A water supplier required to comply with any requirements related to a level 2 coliform investigation due to an exceedance of the MCL for *E. coli* must include in the report the text found in subparagraphs (4)(d)(B)(i) and (ii) of this rule as appropriate, replacing the language in brackets with system specific information as appropriate.

(i) *E. coli* are bacteria whose presence indicates that the water may be contaminated with human or animal wastes. Human pathogens in these wastes can cause short-term effects, such as diarrhea, cramps, nausea, headaches, or other symptoms. They may pose a greater health risk for infants, young children, the elderly, and people with severely compromised immune systems. We found *E. coli* bacteria, indicating the need to look

for potential problems in water treatment or distribution. When this occurs, we are required to conduct investigation(s) to identify problems and to correct any problems that were found during these investigations.

(ii) We were required to complete a level 2 coliform investigation because we found *E. coli* in our water system. In addition, we were required to take [INSERT NUMBER OF CORRECTIVE ACTIONS] corrective actions and we completed [INSERT NUMBER OF CORRECTIVE ACTIONS] of these actions.

(C) A water supplier that has failed to complete a required coliform investigation or correct all identified sanitary defects must include one or both of the following statements, as appropriate:

(i) During the past year, we failed to conduct the required coliform investigation(s).

(ii) During the past year, we failed to correct all sanitary defects that were identified during a coliform investigation as required.

(D) If *E. coli* is detected at a water system and the MCL for *E. coli* was exceeded, in addition to including the information as required by section (3) of this rule, the water supplier must include one or more of the statements specified in subparagraphs (4)(d)(D)(i) through (iv) of this rule as appropriate to describe any noncompliance:

(i) We had an *E. coli*-positive repeat sample following a total coliform-positive routine sample.

(ii) We had a total coliform-positive repeat sample following an *E. coli*-positive routine sample.

(iii) We failed to collect all required repeat samples following an *E. coli*-positive routine sample.

(iv) We failed to test for *E. coli* when a repeat sample tested positive for total coliform.

(E) If *E. coli* is detected at a water system but the MCL for *E. coli* was not exceeded, in addition to completing the table(s) as specified in section (3) of this rule, a water supplier may include a statement that explains that although *E. coli* was detected, the MCL for *E. coli* was not exceeded at the water system.

(5) Special requirements for groundwater systems:

(a) Any groundwater system that receives notification of a significant deficiency that is not corrected at the time of the next report, or of an *E. coli*-positive groundwater source sample that was not invalidated in accordance OAR 333-061-0036(6)(l) must inform its customers in the next report. The water system must continue to inform the public annually until the Authority determines that the particular significant deficiency is corrected or that the fecal contamination in the groundwater source is addressed in accordance

with OAR 333-061-0032(6). Each report must include the following elements:

(A) The nature of the particular significant deficiency or the source of the fecal contamination (if the source is known), and the date the significant deficiency was identified by the Authority or the dates of the *E. coli*-positive groundwater source samples;

(B) If the fecal contamination in the groundwater source has been addressed as prescribed by OAR 333-061-0032(6) and the date of such action;

(C) The Authority-approved plan and schedule for correction, including interim measures, progress to date, and any interim measures completed for any significant deficiency or fecal contamination in the groundwater source that has not been addressed as prescribed by OAR 333-061-0032(6); and

(D) The potential health effects language specified in OAR 333-061-0097(4)(a) if the system received notice of a *E. coli*-positive groundwater source sample that was not invalidated by the Authority in accordance with OAR 333-061-0036(6)(l).

(b) The Authority may require a water system with significant deficiencies that have been corrected before the next report is issued to inform its customers of the significant deficiency, how the deficiency was corrected, and the date of correction in accordance with subsection (5)(a) of this rule.

(6) Report delivery and recordkeeping:

(a) Except as provided in subsection (6)(g) of this rule, each community water system must mail or otherwise directly deliver one copy of the report to each customer.

(b) The system must make a good faith effort to reach consumers who do not get water bills, using means recommended by the Authority. EPA expects that an adequate good faith effort will be tailored to the consumers who are served by the system but are not bill-paying customers, such as renters or workers. A good faith effort to reach consumers would include a mix of methods appropriate to the particular system such as: Posting the reports on the Internet; mailing to postal patrons in metropolitan areas; advertising the availability of the report in the news media; publication in a local newspaper; posting in public places such as cafeterias or lunch rooms of public buildings; delivery of multiple copies for distribution by singularly-billed customers such as apartment buildings or large private employers; delivery to community organizations.

(c) No later than the date the system is required to distribute the report to its customers, each community water system must mail a copy of the report to the Authority, followed within three months by a certification that the report has been distributed to customers, and that the information is correct and

consistent with the compliance monitoring data previously submitted to the Authority.

(d) No later than the date the system is required to distribute the report to its customers, each community water system must deliver the report to any other agency or clearinghouse identified by the Authority.

(e) Each community water system must make its reports available to the public upon request.

(f) Each community water system serving 100,000 or more persons must post its current year's report to a publicly-accessible site on the Internet.

(g) The Governor of a State or his designee, can waive the requirement of subsection (6)(a) of this rule for community water systems serving fewer than 10,000 persons.

(A) Such systems must:

(i) Publish the reports in one or more local newspapers serving the area in which the system is located;

(ii) Inform the customers that the reports will not be mailed, either in the newspapers in which the reports are published or by other means approved by the State; and

(iii) Make the reports available to the public upon request.

(B) Systems serving 500 or fewer persons may forego the requirements of subparagraphs (6)(g)(A)(i) and (ii) of this rule if they provide notice at least once per year to their customers by mail, door-to-door delivery or by posting in an appropriate location that the report is available upon request.

(h) Any system subject to this rule must retain copies of its consumer confidence report for no less than five years.

Stat. Auth.: ORS 448.131
Stats. Implemented: ORS 448.131

333-061-0045
Variances

(1) Variances from the maximum contaminant levels may be granted by the Authority to public water systems under the following circumstances where:

(a) An evaluation satisfactory to the Authority indicates that alternative sources of water are not reasonably available to the system;

(b) There will be no unreasonable risk to health;

(c) The water supplier has provided sufficient evidence to confirm that the best available treatment techniques which are generally available are unable to treat the water in question so that it meets maximum contaminant levels;

(d) The water supplier agrees to notify the water users at least once every three months, or more frequently if determined by the Authority, that the water system is not in compliance;

(e) A compliance schedule is submitted which outlines how the water supplier intends to achieve compliance, and the water supplier agrees to review this schedule once every three years to determine whether changes have occurred in the conditions which formed the basis for the schedule; and

(f) A plan is submitted which outlines interim control measures including application of the best technology treatment technique to be implemented during the period that the variance is in effect.

(2) The Authority shall document all findings of its determinations and if the Authority prescribes a schedule requiring compliance with a contaminant level for which the variance is granted later than five years from the date of issuance of the variance the Authority shall:

(a) Document the rationale for the extended compliance schedule;

(b) Discuss the rationale for the extended compliance schedule in the required public notice and opportunity for public hearing; and

(c) Provide the shortest practicable time schedule feasible under the circumstances.

(3) Before denying a request for a variance, the Authority shall advise the water supplier of the reasons for the denial and shall give the supplier an opportunity to present additional information. If the additional information is not sufficient to justify granting the variance, the variance shall be denied.

(4) If the Authority determines that the variance should be granted, it shall announce its intention to either hold a public hearing in the affected area prior to granting the variance; or serve notice of intent to grant the variance either personally, or by registered or certified mail to all customers connected to the water system, or by publication in a newspaper in general circulation in the area. If no hearing is requested within 10 days of the date that notice is given, the Authority may grant the variance.

(5) When a variance has been granted, and a water supplier fails to meet the compliance schedule, or fails to implement the interim control measures, or fails to undertake the monitoring required under the conditions of the variance, the Authority may initiate enforcement action authorized by these rules.

(6) Variances from the maximum contaminant levels for volatile organic chemicals, organic chemicals and inorganic chemicals shall be issued by the Authority as follows:

(a) The Authority shall require Community water systems and Non-Transient Non-Community water systems to install or use any treatment method identified in OAR 333-061-0050(4)(b)(B), (E) and (F) as a condition for granting a variance except as provided in subsection (6)(b) of this rule. If, after the system's installation of the treatment method, the system cannot meet the MCL, that system shall be eligible for a variance.

(b) If a system can demonstrate through comprehensive engineering assessments, which may include pilot plant studies, that the treatment

methods identified in OAR 333-061-0050(4)(b)(B), (E) and (F) would only achieve an insignificant reduction in contaminants, the Authority may issue a schedule of compliance that requires the system being granted the variance to examine other treatment methods as a condition of obtaining the variance.

(c) If the Authority determines that a treatment method identified in subsection (6)(b) of this rule is technically feasible, the Authority may require the system to install or use that treatment method in connection with a compliance schedule. The Authority's determination shall be based upon studies by the system and other relevant information.

(d) The Authority may require a public water system to use bottled water, point-of-use devices, point-of-entry devices or other means as a condition of granting a variance to avoid an unreasonable risk to health.

(7) The variances from the maximum contaminant level for fluoride shall be granted by the Authority as follows:

(a) The Authority shall require a Community water system to install or use any treatment method identified in OAR 333-061-0050(4)(b)(C) as a condition for granting a variance unless the Authority determines that such treatment method is not available and effective for fluoride control for the system. A treatment method shall not be considered to be "available and effective" for an individual system if the treatment method would not be technically appropriate and technically feasible for that system. If, upon application by a system for a variance, the Authority determines that none of the treatment methods identified in OAR 333-061-0050(4)(b)(C) are available and effective for the system, that system shall be entitled to a variance. The Authority's determination as to the availability and effectiveness of such treatment methods shall be based upon studies by the system and other relevant information. If a system submits information to demonstrate that a treatment method is not available and effective for fluoride control for that system, the Authority shall make a finding whether this information supports a decision that such treatment method is not available and effective for that system before requiring installation or use of such treatment method.

(b) The Authority shall issue a schedule of compliance that may require the system being granted the variance to examine the following treatment methods to determine the probability that any of the following methods will significantly reduce the level of fluoride for that system, and if such probability exists, to determine whether any of these methods are technically feasible and economically reasonable, and that the fluoride reductions obtained will be commensurate with the costs incurred with the installation and use of such treatment methods for that system: Modification of lime softening; Alum coagulation; Electrodialysis; Anion exchange resins; Well field management; Alternate source; or Regionalization.

(c) If the Authority determines that a treatment method identified in subsection (6)(b) of this rule or any other treatment method is technically feasible, economically reasonable, and will achieve fluoride reductions commensurate with the costs incurred with the installation or use of such treatment method for the system, the Authority shall require the system to install or use that treatment method in connection with a compliance schedule. The Authority's determination shall be based upon studies by the system and other relevant information.

(8) Public water systems that use bottled water as a condition for receiving a variance must meet the following requirements.

(a) The public water system must develop and put in place a monitoring program approved by the Authority that provides reasonable assurances that the bottled water meets all MCLs. The public water system must monitor a representative sample of the bottled water for all applicable contaminants under OAR 333-061-0036 the first quarter that it supplies the bottled water to the public, and annually thereafter. Results of the monitoring program shall be provided to the Authority annually.

(b) As an alternative to subsection (7)(a) of this rule, the public water system must receive a certification from the bottled water company that the bottled water supplied has been taken from an "approved source" as defined in 21 CFR 129.3(a); the bottled water company has conducted monitoring in accordance with 21 CFR 129.80(g)(1) through (3); and the bottled water does not exceed any MCLs or quality limits as set out in 21 CFR 103.35, 110, and 129. The public water system shall provide the certification to the Authority the first quarter after it supplies bottled water and annually thereafter.

(c) The public water system is fully responsible for the provision of sufficient quantities of bottled water to every person supplied by the public water system, via door-to-door bottled water delivery.

(9) Public water systems that use point-of-use devices as a condition for obtaining a variance must meet the following requirements:

(a) It is the responsibility of the public water system to operate and maintain the point-of-use treatment system.

(b) The public water system must develop a monitoring plan and obtain Authority approval for the plan before point-of-use devices are installed for compliance. This monitoring plan must provide health protection equivalent to a monitoring plan for central water treatment.

(c) Effective technology must be properly applied under a plan approved by the Authority and the microbiological safety of the water must be maintained.

(d) The water system must submit adequate certification of performance, field testing and, if not included in the certification process, a rigorous engineering design review to the Authority for approval prior to installation.

(e) The design and application of the point-of-use devices must consider the tendency for increase in heterotrophic bacteria concentrations in water treated with activated carbon. It may be necessary to use frequent backwashing, post-contractor disinfection, and Heterotrophic Plate Count monitoring to ensure that the microbiological safety of the water is not compromised.

(f) All consumers shall be protected. Every building connected to the system must have a point-of-use device installed, maintained, and adequately monitored. The Authority must be assured that every building is subject to treatment and monitoring, and that the rights and responsibilities of the public water system customer convey with title upon sale of property.

(10) Public water systems shall not use bottled water to achieve compliance with an MCL. Bottled water or point-of-use devices may be used on a temporary basis to avoid an unreasonable risk to health.

(11) The Authority will not grant a variance or exemption to the requirements of OAR 333-061-0030(3), OAR 333-061-0030(4) or OAR 333-061-0034. Variances to OAR 333-061-0032 will only be granted as provided by section (12) of this rule. The Authority will not grant any variances to the requirements of OAR 333-061-0036 pertaining to the treatment of surface water and groundwater under the direct influence of surface water. No permits will be granted for OAR 333-061-0030(4), OAR 333-061-0032(3)(c) or OAR 333-061-0032(5)(b).

(12) The Authority may grant variances from the standards specified in OAR 333-061-0032(3)(e) through (g) requiring the use of a specified water treatment technique if the Authority determines that the use of a specified water treatment technique is not necessary to protect public health based on the nature of the raw water source for a public water system. A variance granted under this section shall be conditioned on such monitoring and other requirements as the Administrator of the U.S. Environmental Protection Agency or the Director of the Oregon Health Authority may prescribe.

Stat. Auth.: ORS 448.131
Stats. Implemented: ORS 448.135

333-061-0046
Permits

(1) Permits may be issued by the Authority under the following circumstances:

(a) The water system is existing and in operation on the date the MCL or treatment technique requirement became effective; and

(b) The water supplier is unable to comply with the maximum contaminant levels or a treatment requirement due to economic or other compelling factors and;

(c) The water system has not been granted a variance.

(2) Permits may be issued only when the following conditions are met:

(a) The system is unable to implement measures to develop an alternative source of water supply; and

(b) The system cannot reasonably make management or restructuring changes that will result in compliance or improve the quality of the drinking water; and

(c) The system cannot meet the standard without capital improvements which cannot be completed prior to the effective date of the standard; and

(d) In the case of a system which needs financial assistance for the necessary improvement, the system has entered into an agreement to obtain such financial assistance through Federal and State funding programs available to the water system; and

(e) If applicable, the system has entered into an enforceable agreement to become a part of a regional public water system, and the system is taking all practicable steps to meet the standard; and

(f) There will be no unreasonable risk to health; and

(g) The water supplier agrees to notify the water users at least once every three months that the water system is out of compliance; and

(h) The water supplier agrees to a compliance schedule prescribed by the Authority which includes interim measures to eliminate the risks to health and which sets a specific time limit for the water supplier to install the water treatment facilities or comply with the maximum contaminant levels. The compliance schedule shall not exceed 3 years from date of issuance. Bottled water, point-of-use devices or point-of-entry devices may be used as interim health protection measures as prescribed in OAR 333-061-0045(8) and (9) and 333-061-0050(4)(d), except that point-of-entry devices are not allowed as a condition for issuing a permit for corrosion control treatment requirements for lead and copper. Point-of-entry devices may be used as a condition for issuing a permit for source water treatment.

(3) The procedures for processing requests for permits shall be the same as indicated for variances in OAR 333-061-0045(3) and (4).

(4) After a permit has been issued, the water supplier shall be subject to the same requirements as those indicated for variances in OAR 333-061-0045(5).

(5) The Authority is not permitted to issue any permits for alternate requirements other than those required by OAR 333-061-0030(3) and (4), as well as the requirements of 333-061-0032, 333-061-0034 and 333-061-0036.

(6) The Authority shall document all findings of determinations and consider the following:

(a) Before finding that management and restructuring changes cannot be made, the Authority shall consider the following measures, and the availability of State Revolving Loan Fund assistance, or any other Federal or State program, that is reasonably likely to be available within the period of the permit to implement these measures:

(A) Consideration of the rate increases, accounting changes, the appointment of a State-certified operator under the State's Operator Certification program, contractual agreements for joint operation with one or more public water systems;

(B) Activities consistent with the State's Capacity Development Strategy to help the public water system acquire and maintain technical, financial and managerial capacity to come into compliance with the Safe Drinking Water Act; and

(C) Ownership changes, physical consolidation with another public water system, or other feasible and appropriate means of consolidation which would result in compliance with the Safe Drinking Water Act.

(b) The Authority must consider the availability of an alternative source of water, including the feasibility of partnerships with neighboring public water systems, as identified by the public water system or by the Authority consistent with the Capacity Development Strategy.

(7) In the case of a public water system serving a population of not more than 3,300 persons and which needs financial assistance for the necessary improvements under the initial compliance schedule, a permit granted by the Authority may be renewed for one or more additional 2-year periods, but not to exceed a total of six additional years, only if the Authority establishes that the public water system is taking all practicable steps to meet the requirements and the established compliance schedule to achieve full compliance with the contaminant level or treatment technique for which the permit was granted. The Authority shall document its findings in granting a permit under this rule.

Stat. Auth.: ORS 448.131
Stats. Implemented: ORS 448.115, 448.145

333-061-0050
Construction Standards

(1) General:

(a) These standards shall apply to the construction of new public water systems and to major additions or modifications to existing public water systems and are intended to assure that the system facilities, when constructed, will be free of public health hazards and will be capable of producing water which consistently complies with the maximum contaminant levels;

(b) Facilities at public water systems must comply with the construction standards in place at the time the facility was constructed or installed for use at a public water system. A public water system shall not be required to undertake alterations to existing facilities, unless the standard is listed as a significant deficiency as prescribed in OAR 333-061-0076(4) or if maximum contaminant levels are being exceeded.

(c) Non-public water systems that are converted to public water systems shall be modified as necessary to conform to the requirements of this rule.

(d) Facilities at public water systems shall be designed and constructed in a manner such that contamination will be effectively excluded, and the structures and piping will be capable of safely withstanding external and internal forces acting upon them;

(e) Only materials designed for potable water service and meeting NSF Standard 61 - Drinking Water System Components or equivalent shall be used in those elements of the water system which are in contact with potable water;

(f) New tanks, pumps, equipment, pipe valves and fittings shall be used in the construction of new public water systems, major additions or major modifications to existing water systems. The Authority may permit the use of used items when it can be demonstrated that they have been renovated and are suitable for use in public water systems;

(g) Prior to construction of new facilities, the water supplier shall submit plans to the Authority for approval as specified in OAR 333-061-0060(1)(a).

(h) Construction may deviate from the requirements of this section provided that documentation is submitted, to the satisfaction of the Authority, that the deviation is equal to or superior to the requirements of this section as specified in OAR 333-061-0055 (variances from construction standards).

(i) A public water system or other Responsible Management Authority using groundwater, or groundwater under the direct influence of surface water, derived from springs, confined or unconfined wells that wish to have a state certified wellhead protection program shall comply with the requirements as specified in OAR 333-061-0057, 0060, and 0065, as well as OAR 340-040-0140 through 0200. Additional technical information is available in the Oregon Wellhead Protection Guidance Manual.

(j) All new groundwater sources are subject to consideration for potential direct influence of surface water as prescribed in OAR 333-061-0032(8).

(2) Groundwater:

(a) Wells:

(A) For the purpose of this rule, wells are defined as holes or other excavations that are drilled, dug or otherwise constructed for the purpose of capturing groundwater or groundwater in hydraulic connection with surface water as a source of public drinking water.

(B) The area within 100 feet of the well shall be owned by the water supplier, or a perpetual restrictive easement shall be obtained by the water supplier for all land (with the exception of public rights-of-way) within 100 feet of the well. The easement shall be recorded with the county in which the well is located and with the recorded deed to the property. A certified true copy shall be filed with the Authority;

(C) Not withstanding paragraph (2)(a)(A) of this rule, wells located on land owned by a public entity, (Federal, State, County, Municipality)

which is not the water supplier, a permit issued by the public entity to the water supplier shall suffice in lieu of an easement. Said permit shall state that no existing or potential public health hazard shall be permitted within a minimum of 100 feet of a well site;

(D) Public or private roadways may be allowed within 100 feet of a confined well, provided the well is protected against contamination from surface runoff or hazardous liquids which may be spilled on the roadway and is protected from unauthorized access;

(E) The following sanitary hazards are not allowed within 100 feet of a well which serves a public water system unless waived by the Authority: any existing or proposed pit privy, subsurface sewage disposal drain field; cesspool; solid waste disposal site; pressure sewer line; buried fuel storage tank; animal yard, feedlot or animal waste storage; untreated storm water or gray water disposal; chemical (including solvents, pesticides and fertilizers) storage, usage or application; fuel transfer or storage; mineral resource extraction, vehicle or machinery maintenance or long term storage; junk/auto/scrap yard; cemetery; unapproved well; well that has not been properly abandoned or of unknown or suspect construction; source of pathogenic organisms or any other similar public health hazards. No gravity sewer line or septic tank shall be permitted within 50 feet of a well which serves a public water system. Clearances greater than indicated above shall be provided when it is determined by the Authority that the aquifer sensitivity and degree of hazard require a greater degree of protection. Above-ground fuel storage tanks provided for emergency water pumping equipment may be exempted from this requirement by the Authority provided that a secondary containment system is in place that will accommodate 125 percent of the fuel tank storage;

(F) Except as in paragraph (2)(a)(A) and (2)(a)(E) of this rule, in those areas served by community gravity sanitary sewers, the area of ownership or control may be reduced to 50 feet;

(G) Wells shall not be located at sites which are prone to flooding. In cases where the site is subject to flooding, the area around the well shall be mounded, and the top of the well casing shall be extended at least two feet above the anticipated 100-year (1 percent) flood level;

(H) Except as otherwise provided herein, wells shall be constructed in accordance with the general standards for the construction and maintenance of water wells in Oregon as prescribed in OAR chapter 690, divisions 200 through 220;

(I) Wells as defined in paragraph (2)(a)(A) of this rule that are less than 12 feet in depth must be constructed so as to be cased and sealed from

the surface to a minimum of three feet above the bottom of the well. The casing may consist of concrete or metal culvert pipe or other pre-approved materials. The seal shall be watertight, be a minimum of four inches in thickness and may consist of cement, bentonite or concrete (see concrete requirements prescribed in OAR 690-210-315). The construction and placement of these wells must comply with all requirements of this rule.

(J) Before a well is placed into operation as the source of supply at a public water system, laboratory reports as required by OAR 333-061-0036 shall be submitted by the water supplier;

(K) Water obtained from wells which exceed the maximum contaminant levels shall be treated as outlined in section (4) of this rule;

(L) The pump installation, piping arrangements, other appurtenances, and well house details at wells which serve as the source of supply for a public water system, shall meet the following requirements:

(i) The line shaft bearings of turbine pumps shall be water-lubricated, except that bearings lubricated with non-toxic approved food-grade lubricants may be permitted in wells where water-lubricated bearings are not feasible due to depth to the water;

(ii) Where turbine pumps are installed, the top of the casing shall be sealed into the pump motor. Where submersible pumps are installed, the top of the casing shall be provided with a watertight sanitary seal;

(iii) A casing vent shall be provided and shall be fitted with a screened return bend;

(iv) Provisions shall be made for determining the depth to water surface in the well under pumping and static conditions;

(v) A sampling tap shall be provided on the pump discharge line;

(vi) Piping arrangements shall include provisions for pumping the total flow from the well to waste;

(vii) A method of determining the total output of each well shall be provided. This requirement may be waived by the Authority at confined wells which serve as the source of supply for Transient Non-Community water systems;

(viii) A reinforced concrete slab shall be poured around the well casing at ground surface. The slab shall be sloped to drain away from the casing;

(ix) The ground surface around the well slab shall be graded so that drainage is away from the well;

(x) The top of the well casing shall extend at least 12 inches above the concrete slab;

(xi) Provisions shall be made for protecting pump controls and other above-ground appurtenances at the well head. Where a wellhouse is installed for this purpose, it shall meet applicable building codes and shall be insulated, heated and provided with lights, except that where the wellhouse consists of a small removable box-like structure the requirement for lights may be waived by the Authority;

(xii) The wellhouse shall be constructed so that the well pump can be removed.

(xiii) Wells equipped with pitless adaptors or units are not required to meet the requirements of subparagraphs (2)(a)(L)(iii) and (viii) of this rule.

(M) The area in the vicinity of a well, particularly the area uphill or upstream, shall be surveyed by the water supplier to determine the location and nature of any existing or potential public health hazards;

(N) The requirements with respect to land ownership, clearances from public health hazards, and protection against flooding for wells in an unconfined aquifer shall be the same or more restrictive than those prescribed for wells in confined aquifers, as determined by the Authority.

(O) Before a well is placed into operation as the source of supply for a public water system, the following documents shall be submitted by the water supplier:

(i) Reports on pumping tests for yield and drawdown for unconfined wells;

(ii) Reports of laboratory analyses on contaminants in the water as required by OAR 333-061-0036;

(iii) Performance data on the pumps and other equipment;

(iv) Proposals for disinfection as required by section (5) of this rule, if applicable.

(v) Reports on determination of potential direct influence by surface water into groundwater source as prescribed in section (3) of this rule.

(b) Springs:

(A) In addition to those requirements under subsection (2)(a) of this rule, construction of spring supplies shall meet the following requirements:

(i) An intercepting ditch shall be provided above the spring to effectively divert surface water;

(ii) A fence shall be installed around the spring area unless other provisions are made to effectively prevent access by animals and unauthorized persons;

(iii) The springbox shall be constructed of concrete or other impervious durable material and shall be installed so that surface water is excluded;

(iv) The springbox shall be provided with a screened overflow which discharges to daylight, an outlet pipe provided with a shutoff valve, a bottom drain, an access manhole with a tightly fitting cover, and a curb around the manhole.

(v) Spring collection facilities that meet the definition of a well in paragraph (2)(a)(A) of this rule must comply with construction requirements specified in paragraph (2)(a)(I) of this rule.

(B) Reports on flow tests shall be provided to establish the yield of springs.

(3) Surface water and groundwater under direct surface water influence source facilities:

(a) In selecting a site for an infiltration gallery, or for a direct intake from a stream, lake, or impounding reservoir, consideration shall be given to land use in the watershed. A sanitary survey of the watershed shall be made by the water supplier to evaluate natural and man-made factors which may affect water quality and investigations shall also be made of seasonal variations in water quality and quantity. A report giving the results of this survey shall be submitted for review and approval by the Authority.

(b) A determination shall be made as to the status of water rights, and this information shall be submitted to the Authority for review.

(c) Impounding reservoirs shall be designed and constructed so that they include the following features:

(A) The capacity shall be sufficient to meet projected demands during drought conditions;

(B) Outlet piping shall be arranged so that water can be withdrawn from various depths;

(C) Facilities shall be provided for releasing undesirable water.

(d) Direct intake structures shall be designed and constructed so that they include the following features:

(A) Screens shall be provided to prevent fish, leaves and debris from entering the system;

(B) Provisions shall be made for cleaning the screens, or self-cleaning screens shall be installed;

(C) Motors and electrical controls shall be located above flood level;

(D) Provisions shall be made to restrict swimming and boating in the vicinity of the intake;

(E) Valves or sluice gates shall be installed at the intake to provide for the exclusion of undesirable water when required.

(4) Water treatment facilities (other than disinfection):

(a) General

(A) Water treatment facilities shall be capable of producing water which consistently does not exceed maximum contaminant levels. The type of treatment shall depend on the raw water quality. The Authority shall make determinations of treatment capabilities based upon recommendations in the US EPA Guidance Manual for Compliance with the Filtration and Disinfection Requirements for Public Water Systems Using Surface Water Sources.

(B) Investigations shall be undertaken by the water supplier prior to the selection or installation of treatment facilities to determine the physical, chemical and microbiological characteristics of the raw water as appropriate. These investigations shall include a determination of the seasonal variations in water quality, as well as a survey to identify potential sources of contamination which may affect the quality of the raw water.

(C) Water obtained from wells constructed in conformance with the requirements of these rules and which is found not to exceed the maximum contaminant levels, may be used without treatment at public water systems;

(D) Laboratory equipment shall be provided so that the water supplier can perform analyses necessary to monitor and control the treatment processes.

(E) A sampling tap shall be provided following the treatment process and before the first user when any form of water treatment is in use at a water system.

(b) Best Available Technology

(A) Pilot studies or other supporting data shall be used to demonstrate the effectiveness of any treatment method other than that defined as best available technology. Pilot study protocol shall be approved beforehand by the Authority. When point-of-use (POU) or point-of-entry (POE) devices are used for compliance, programs to ensure proper long-term operation, maintenance, and monitoring shall be provided by the water system to ensure adequate performance.

(B) The Authority identifies the following as the best available technology, treatment techniques, or other means available for achieving compliance with the maximum contaminant levels for volatile organic chemicals:

(i) Central treatment using packed tower aeration for all these chemicals.

(ii) Central treatment using granular activated carbon for all these chemicals except vinyl chloride.

(C) The Authority identifies the following as the best available technology, treatment techniques or other means generally available for achieving compliance with the Maximum Contaminant Level for fluoride.

(i) Activated alumina absorption, centrally applied.

(ii) Reverse osmosis, centrally applied.

(D) The Authority identifies the following as the best available technology, treatment techniques, or other means available for achieving compliance with the MCL for *E. coli* as specified in OAR 333-061-0030(4).

(i) Protection of wells from fecal contamination by appropriate placement and construction.

(ii) Maintenance of a disinfectant residual throughout the distribution system.

(iii) Proper maintenance of the distribution system including appropriate pipe replacement and repair procedures, main flushing programs, proper operation and maintenance of storage tanks and reservoirs, cross connection control and maintaining a minimum pressure of 20 psi at all service connections.

(iv) Filtration treatment or disinfection of surface water or GWUDI or disinfection of groundwater using strong oxidants such as chlorine, chlorine dioxide, or ozone.

(v) For systems using only groundwater, compliance with the requirements of an Authority approved wellhead protection program.

(E) The Authority identifies the following as the best available technology, treatment techniques, or other means available for achieving compliance with the maximum contaminant levels for organic chemicals.

(i) Central treatment using packed tower aeration for Dibromochloropropane, Ethylene Dibromide, Hexachlorocyclopentadiene and Di(2-ethylhexyl)adipate.

(ii) Central treatment using granular activated carbon for all these chemicals except Trihalomethanes and Glyphosate.

(iii) Central treatment using oxidation (chlorination or ozonation) for Glyphosate.

(F) The Authority identifies the following as the best available technology, treatment techniques, or other means available for achieving compliance with the maximum contaminant levels for inorganic chemicals. Preoxidation may be required to convert Arsenic III to Arsenic V.

(i) Central treatment using coagulation/filtration for systems with 500 or more service connections for Antimony, Arsenic V (for systems with populations 501-10,000), Asbestos, Beryllium, Cadmium, Chromium, Mercury (influent concentration ≥ 10ug/L), and Selenium (Selenium IV only).

(ii) Central treatment using direct and diatomite filtration for Asbestos.

(iii) Central treatment using granular activated carbon for Mercury.

(iv) Central treatment using activated alumina for Arsenic V (for systems with populations l0,000 or less), Beryllium, Selenium and Thallium.

(v) Central treatment using ion exchange for Arsenic V (for systems with populations 10,000 or less), Barium, Beryllium, Cadmium, Chromium, Cyanide, Nickel, Nitrate, Nitrite and Thallium.

(vi) Central treatment using lime softening for systems with 500 or more service connections for Arsenic V (for systems with populations of 501-10,000), Barium, Beryllium, Cadmium, Chromium (Chromium III only), Mercury (influent concentration ≥ 10ug/L), Nickel and Selenium.

(vii) Central treatment using reverse osmosis for Antimony, Arsenic V (for systems with populations of 501-10,000), Barium, Beryllium, Cadmium, Chromium, Cyanide, Mercury (influent concentration ≥ 10ug/L), Nickel, Nitrate, Nitrite, and Selenium.

(viii) Central treatment using corrosion control for Asbestos and Lead and Copper.

(ix) Central treatment using electrodialysis for Arsenic V (for systems with populations of 501-10,000), Barium, Nitrate, and Selenium.

(x) Central treatment using alkaline chlorination (pH≥8.5) for Cyanide.

(xi) Central treatment using coagulation-assisted microfiltration for Arsenic V (for systems with populations 501-10,000).

(xii) Central treatment using oxidation/filtration for Arsenic V (to obtain high removals, iron to Arsenic ratio must be at least 20:1).

(xiii) Point-of-use treatment using activated alumina for Arsenic V (for systems with populations 10,000 or less).

(xiv) Point-of-use treatment using reverse osmosis for Arsenic V (for systems with populations 10,000 or less).

(G) The Authority identifies the following as the best technology, treatment techniques, or other means available for achieving

compliance with the maximum contaminant levels for disinfection byproducts:

(i) For bromate concentrations: control of ozone treatment process to reduce production of bromate.

(ii) For chlorite concentrations: control of treatment processes to reduce disinfectant demand and control of disinfection treatment processes to reduce disinfectant levels.

(iii) For TTHM and HAA5, for water systems that disinfect their source water and monitor in accordance with OAR 333-061-0036(4)(c) or (d): enhanced coagulation or enhanced softening plus GAC10; or nanofiltration with a molecular weight cutoff less than or equal to 1000 Daltons; or GAC20.

(iv) For TTHMs and HAA5, for purchasing water systems with populations greater than or equal to 10,000 and that monitor in accordance with OAR 333-061-0036(4)(c) or (d) improved distribution system and storage tank management to reduce residence time, plus the use of chloramines for disinfectant residual maintenance. This applies only to the disinfected water that purchasing water systems receive from a wholesale system.

(v) For TTHMs and HAA5, for purchasing water systems with populations less than 10,000 and that monitor in accordance with OAR 333-061-0036(4)(c) or (d): improved distribution system and storage tank management to reduce residence time. This applies only to the disinfected water that purchasing water systems receive from a wholesale system.

(H) The Authority identifies the following as the best technology, treatment techniques, or other means available for achieving compliance with the maximum residual disinfectant levels: Control of treatment processes to reduce disinfectant demand and control of disinfection treatment processes to reduce disinfectant levels.

(I) The Authority identifies the following as the best available technology, treatment techniques, or other means available for achieving compliance with the MCLs for radionuclides.

(i) Central treatment using ion exchange for combined radium-226/228, beta particle/photon activity and uranium.

(ii) Central treatment using reverse osmosis for combined radium-226/228, gross alpha particle activity, beta particle/photon activity, and uranium (for systems with populations 501-10,000).

(iii) Central treatment using lime softening for combined radium-226/228, and uranium (for systems with populations 501-10,000).

(iv) Central treatment using enhanced coagulation/filtration for uranium.
(v) Central treatment using activated alumina for uranium (for systems with populations of 10,000 or less).
(vi) Central treatment using greensand filtration for combined radium-226/228.
(vii) Central treatment using electrodialysis for combined radium-226/228.
(viii) Central treatment using pre-formed hydrous manganese oxide filtration for combined radium-226/228.
(ix) Central treatment using co-precipitation with barium for combined radium-226/228.
(x) Point-of-use treatment using ion exchange for combined radium-226/228, beta particle/photon activity, and uranium.
(xi) Point-of use treatment using reverse osmosis for combined radium-226/228, gross alpha particle activity, beta particle/ photon activity, and uranium (for systems with populations of 10,000 or less).

(c) Filtration of Surface Water Sources and Groundwater Sources Under the Direct Influence of Surface Water

(A) All water systems using surface water or groundwater sources under the direct influence of surface water that fail to meet the criteria for avoiding filtration prescribed in OAR 33-061-0032(2) and (3) must meet all requirements of this subsection for installing filtration treatment.

(B) There are four standard filtration methods: conventional filtration, direct filtration, slow sand, and diatomaceous earth. Other filtration technologies are only acceptable if their efficiency at removing target organisms and contaminants can be demonstrated to be equal to or more efficient than these. The assumed log removals credited to filtration of *Giardia lamblia* and viruses will be based on recommendations in the US EPA Guidance Manual for Compliance with the Filtration and Disinfection Requirements for Public Water Systems Using Surface Water Sources. In all cases, filtration processes must be designed and operated to achieve at least 2.0 log removal of *Giardia lamblia*. For membrane filtration, removal credits shall be verified by a challenge study according to paragraphs (4)(c)(H) and (I) of this rule. Bag and Cartridge Filtration must have removal credits demonstrated in a challenge study according to paragraph (4)(c)(J) of this rule. The combination of filtration and disinfection must meet the inactivation levels prescribed in OAR 333-061-0032(1). Any water system wishing to challenge the assumed log

removal credits must conduct demonstration studies based on the recommendations in the USEPA SWTR Guidance Manual and have the study protocol approved by the Authority.

(C) Pilot studies shall be conducted by the water supplier to demonstrate the effectiveness of any filtration method other than conventional filtration. Pilot study protocol shall be approved in advance by the Authority. Results of the pilot study shall be submitted to the Authority for review and approval.

(D) Regardless of the filtration method used, the water system must achieve a minimum of 0.5-log reduction of *Giardia lamblia* and a 1.0-log reduction of viruses from disinfection alone after filtration treatment.

(E) All filtration systems shall be designed and operated so as to meet the requirements prescribed in OAR 333-061-0032(4) and (5). Design of the filtration system must be in keeping with accepted standard engineering references acknowledged by the Authority such as the Great Lakes Upper Mississippi River "Recommended Standards for Water Works" technical reports by the International Reference Center for Community Water Supply and Sanitation, or publications from the World Health Organization. A list of additional references is available from the Authority upon request.

(F) Requirements for water systems using conventional or direct filtration

(i) Systems that employ multiple filters shall be designed such that turbidity measurements are monitored for each filter independently of the other filter(s). Each filter shall have a provision to discharge effluent water as waste.

(ii) All water treatment plants shall have an auto-dial call out alarm or an automatic shut-off for high turbidity.

(G) Additional requirements for membrane filtration. Each membrane filter system must have a turbidimeter installed after each filter unit for continuous indirect integrity monitoring. Once operating, direct and indirect integrity testing must be conducted on each unit as described in OAR 333-061-0036(5)(d). The operation and maintenance manual must include a diagnosis and repair plan such that the ability to remove pathogens is not compromised.

(H) Challenge Study criteria for Membrane Filtration. Water systems receive *Cryptosporidium* treatment credit for membrane filtration, as defined in OAR 333-061-0020(77)(f), that meets the criteria of this paragraph. The level of treatment credit a water system receives is equal to the lower of the values determined in this paragraph.

(i) The removal efficiency demonstrated during challenge testing conducted under the conditions in accordance with paragraph (4)(c)(I) of this rule.

(ii) The maximum removal efficiency that can be verified through direct integrity testing of the membrane filtration process under the conditions prescribed by OAR 333-061-0036(5)(d)(B).

(I) Challenge Testing. The membrane filter used by the water system must undergo challenge testing to evaluate removal efficiency, and results of the challenge testing must be reported to the Authority. Challenge testing must be conducted according to the criteria specified in this paragraph. Water systems may use data from challenge testing conducted prior to June 1, 2009 if the prior testing was consistent with the criteria specified in this paragraph.

(i) Challenge testing must be conducted on a full-scale membrane module, identical in material and construction to the membrane modules used in the water system's treatment facility, or a smaller-scale membrane module, identical in material and similar in construction to the full-scale module. A module is defined as the smallest component of a membrane unit in which a specific membrane surface area is housed in a device with a filtrate outlet structure.

(ii) Challenge testing must be conducted using *Cryptosporidium* oocysts or a surrogate that is removed no more efficiently than *Cryptosporidium* oocysts. *Cryptosporidium* or the surrogate used during challenge testing is referred to as the challenge particulate. The concentration of the challenge particulate, in both the feed and filtrate water, must be determined using a method capable of discretely quantifying the specific challenge particulate used in the test; gross measurements such as turbidity may not be used.

(iii) The maximum feed water concentration that can be used during a challenge test is based on the detection limit of the challenge particulate in the filtrate and must be determined according to the following equation:

Maximum Feed Concentration $= 3.16 \times 10^6 \times$ *(Filtrate Detection Limit)*

(iv) Challenge testing must be conducted according to representative hydraulic conditions at the maximum design flux and maximum design process recovery specified by the manufacturer for the membrane module. Flux is defined as the throughput of a pressure driven membrane process expressed as flow per unit of membrane area. Recovery is defined as the

volumetric percent of feed water that is converted to filtrate over the course of an operating cycle uninterrupted by events such as chemical cleaning or a solids removal process (that is, backwashing).

(v) Removal efficiency of a membrane module must be calculated from the challenge test results and expressed as a log removal value according to the following equation:

$LRV = LOG_{10}(Cf) - LOG_{10}(Cp)$

Where:

LRV = log removal value demonstrated during the challenge test;

Cf = the feed concentration measured during the challenge test; and

Cp = the filtrate concentration measured during the challenge test. Equivalent units must be used for the feed and filtrate concentrations. If the challenge particulate is not detected in the filtrate, the term Cp is set equal to the detection limit for the purpose of calculating the LRV. An LRV must be calculated for each membrane module evaluated during the challenge test.

(vi) The removal efficiency of a membrane filtration process demonstrated during challenge testing must be expressed as a log removal value (LRVC-Test). If fewer than 20 modules are tested, then LRVC-Test is equal to the lowest of the representative LRVs among the modules tested. If 20 or more modules are tested, then LRVC-Test is equal to the 10th percentile of the representative LRVs among the modules tested. The percentile is defined by (i/(n+1))where i is the rank of n individual data points ordered lowest to highest. If necessary, the 10th percentile may be calculated using linear interpolation.

(vii) The challenge test must establish a quality control release value (QCRV) for a non-destructive performance test that demonstrates the *Cryptosporidium* removal capability of the membrane filtration module. This performance test must be applied to each production membrane module used by the system that was not directly challenge tested in order to verify *Cryptosporidium* removal capability. Production modules that do not meet the established QCRV are not eligible for the treatment credit demonstrated during the challenge test.

(viii) If a previously tested membrane is modified in a manner that could change the removal efficiency of the membrane or the applicability of the non-destructive performance test and

associated QCRV, additional challenge testing to demonstrate the removal efficiency of, and determine a new QCRV for, the modified membrane must be conducted and submitted to the Authority.

(J) Challenge Study requirements for Bag and Cartridge Filtration.

(i) The *Cryptosporidium* treatment credit awarded to bag or cartridge filters must be based on the removal efficiency demonstrated during challenge testing that is conducted according to the criteria specified in this paragraph. A factor of safety equal to 1-log for individual bag or cartridge filters and 0.5-log for bag or cartridge filters in series must be applied to challenge testing results to determine removal credit. Water systems may use results from challenge testing conducted prior to June 1, 2009 if the prior testing was consistent with the criteria specified in this paragraph.

(ii) Challenge testing must be performed on full-scale bag or cartridge filters and the associated filter housing or pressure vessel, that are identical in material and construction to the filters and housings the water system will use for removal of *Cryptosporidium*. Bag or cartridge filters must be challenge tested in the same configuration that the system will use, either as individual filters or as a series configuration of filters.

(iii) Challenge testing must be conducted using *Cryptosporidium* or a surrogate that is removed no more efficiently than *Cryptosporidium*. The microorganism or surrogate used during challenge testing is referred to as the challenge particulate. The concentration of the challenge particulate must be determined using a method capable of discreetly quantifying the specific microorganism or surrogate used in the test; gross measurements such as turbidity may not be used.

(iv) The maximum feed water concentration that can be used during a challenge test must be based on the detection limit of the challenge particulate in the filtrate (that is, filtrate detection limit) and must be calculated using the following equation:
Maximum Feed Concentration $= 1 \times 10^4 \times$ *(Filtrate Detection Limit)*

(v) Challenge testing must be conducted at the maximum design flow rate for the filter as specified by the manufacturer.

(vi) Each filter evaluated must be tested for a duration sufficient to reach 100 percent of the terminal pressure drop, which establishes the maximum pressure drop under which the filter may be used to comply with the requirements of this paragraph.

(vii) Removal efficiency of a filter must be determined from the results of the challenge test and expressed in terms of log removal values using the following equation:
LRV = LOG10(Cf)-LOG10(Cp)
Where:
LRV = log removal value demonstrated during challenge testing;
Cf = the feed concentration measured during the challenge test; and
Cp = the filtrate concentration measured during the challenge test. In applying this equation, the same units must be used for the feed and filtrate concentrations. If the challenge particulate is not detected in the filtrate, then the term Cp must be set equal to the detection limit.

(viii) Each filter tested must be challenged with the challenge particulate during three periods over the filtration cycle: within two hours of start-up of a new filter; when the pressure drop is between 45 and 55 percent of the terminal pressure drop; and at the end of the cycle after the pressure drop has reached 100 percent of the terminal pressure drop. An LRV must be calculated for each of these challenge periods for each filter tested. The LRV for the filter (LRVfilter) must be assigned the value of the minimum LRV observed during the three challenge periods for that filter.

(ix) If fewer than 20 filters are tested, the overall removal efficiency for the filter product line must be set equal to the lowest LRVfilter among the filters tested. If 20 or more filters are tested, the overall removal efficiency for the filter product line must be set equal to the 10th percentile of the set of LRVfilter values for the various filters tested. The percentile is defined by (i/(n+1))where i is the rank of n individual data points ordered lowest to highest. If necessary, the 10th percentile may be calculated using linear interpolation.

(x) If a previously tested filter is modified in a manner that could change the removal efficiency of the filter product line, challenge testing to demonstrate the removal efficiency of the modified filter must be conducted and submitted to the Authority.

(K) Water systems using cartridge filtration must have pressure gauges installed before and after each cartridge filter.

(L) Water systems using diatomaceous earth filtration must add the body feed with the influent flow.

(d) Criteria and procedures for public water systems using point-of-entry (POE) or point-of-use (POU) devices.

(A) Public water systems may use POE or POU devices to comply with maximum contaminant levels, where specified in subsection (4)(b) of this rule, only if they meet the requirements of this subsection.

(B) It is the responsibility of the public water system to operate and maintain the POE or POU treatment system.

(C) The public water system must develop and obtain Authority approval for a monitoring plan before POE or POU devices are installed for compliance. Under the plan approved by the Authority, POE or POU devices must provide health protection equivalent to central water treatment. "Equivalent" means that the water would meet all Maximum Contaminant Levels as prescribed in OAR 333-061-0030 and would be of acceptable quality similar to water distributed by a well-operated central treatment plant. Monitoring must include contaminant removal efficacy, physical measurements and observations such as total flow treated and mechanical condition of the treatment equipment.

(D) Effective technology must be properly applied under a plan approved by the Authority and the microbiological safety of the water must be maintained.

(i) The water supplier must submit adequate certification of performance, field testing, and, if not included in the certification process, a rigorous engineering design review of the POE or POU devices to the Authority for approval prior to installation.

(ii) The design and application of the POE or POU devices must consider the tendency for increase in heterotrophic bacteria concentrations in water treated with activated carbon. It may be necessary to use frequent backwashing, post-contractor disinfection, and Heterotrophic Plate Count monitoring to ensure that the microbiological safety of the water is not compromised.

(iii) The POE or POU device must be evaluated to assure that the device will not cause increased corrosion of lead and copper bearing materials located between the device and the tap that could increase contaminant levels of lead and copper at the tap.

(E) All consumers shall be protected. Every building connected to the system must have a POE or POU device installed, maintained, and adequately monitored. The Authority must be assured that every building is subject to treatment and monitoring, and that the rights and

responsibilities of the public water system customer convey with title upon sale of property.

(5) Facilities for continuous disinfection and disinfectant residual maintenance:

(a) Water obtained from surface sources or groundwater sources under the direct influence of surface water shall, as a minimum, be provided with continuous disinfection before such water may be used as a source of supply for a public water system. Water obtained from wells constructed in conformance with the requirements of these rules and which is found not to exceed microbiological maximum contaminant levels, may be used without treatment at public water systems;

(b) Water obtained from wells and springs shall be considered groundwater unless determined otherwise by the Authority. Wells and springs may be utilized without continuous disinfection if the construction requirements of section (2) of this rule are met and analyses indicate that the water consistently meets microbiological standards. A well or spring that is inadequately constructed, shows a history of *E coli*. contamination, and where the Authority determines that reconstruction will add a significant measure of public health protection, must be upgraded to meet current construction standards or disconnected from the water system.

(c) In public water systems where continuous disinfection is required as the sole form of treatment, or as one component of more extensive treatment to meet the requirements prescribed in OAR 333-061-0032(1), the facilities shall be designed so that:

(A) The disinfectant applied shall be capable of effectively destroying pathogenic organisms;

(B) The disinfectant is applied in proportion to water flow; and

(C) Disinfectants, other than ultraviolet light and ozone disinfection treatment, shall be capable of leaving a residual in the water which can be readily measured and which continues to serve as an active disinfectant; and

(D) Sufficient contact time shall be provided to achieve "CT" values capable of the inactivation required by OAR 333-061-0032(1). For ultraviolet light disinfection treatment, sufficient irradiance expressed in milliwatts per square centimeter (mWs/cm2) and exposure time expressed in seconds shall be provided to achieve UV dose levels expressed as (mWs/cm2) or millijoules per square centimeter (mJ/cm2) capable of the inactivation required by OAR 333-061-0032(1).

(d) When continuous disinfection, other than ultraviolet light disinfection, is required for reasons other than the treatment of surface water sources or groundwater sources under the direct influence of surface water, in addition

to the requirements of paragraphs (5)(c)(A) through (C) of this rule, the facilities shall be designed so that:

(A) The primary disinfection treatment is sufficient to ensure at least 99.99 percent (4-log) inactivation or removal of viruses as determined by the Authority, or;

(B) There is sufficient contact time provided to achieve disinfection under all flow conditions between the point of disinfectant application and the point of first water use:

(i) When chlorine is used as the primary disinfectant, the system shall be constructed to achieve a free chlorine residual of 0.2 mg/l after 30 minutes contact time under all flow conditions before first water use;

(ii) When ammonia is added to the water with the chlorine to form a chloramine as the disinfectant, the system shall be constructed to achieve a combined chlorine residual of at least 2.0 mg/l after three hours contact time under all flow conditions before first water use;

(e) Provisions shall be made to alert the water supplier before the chlorine supply is exhausted. Water systems serving more than 3,300 people shall have an auto-dial call out alarm or an automatic shut-off for low chlorine residual when chlorine is used as a disinfectant.

(f) For continuous disinfection only, provisions shall be made for sampling the water before and after chlorination;

(g) Testing equipment shall be provided to determine the chlorine residual;

(h) Chlorinator piping shall be designed to prevent the contamination of the potable water system by backflow of untreated water or water having excessive concentrations of chlorine;

(i) The disinfectant must be applied in proportion to water flow;

(j) Chlorine gas feeders and chlorine gas storage areas shall:

(A) Be enclosed and separated from other operating areas;

(B) Chlorine cylinders shall be restrained in position to prevent upset by chaining 100 and 150 pound cylinders two-thirds of their height up from the floor and by double chocking one ton cylinders;

(C) The room housing the feeders and cylinders shall be above ground surface, shall have doors which open outward and to the outside and shall be ventilated by mechanical means at floor level and shall have an air intake located higher than the exhaust ventilation;

(D) Be located so that chlorine gas, if released, will not flow into the building ventilation systems;

(E) Have corrosion resistant lighting and ventilation switches located outside the enclosure, adjacent to the door;

(F) Be provided with a platform or hydraulic scale for measuring the weight of the chlorine cylinders;

(G) Be provided with a gas mask or self contained breathing apparatus approved by the National Institute of Occupational Safety and Health (NIOSH) for protection against chlorine gas and kept in good working condition. Storage of such equipment shall be in an area adjoining the chlorine room and shall be readily available. (Also see the Oregon Occupational Health and Safety regulations contained in OAR chapter 437.)

(k) When continuous disinfection treatment is provided through ultraviolet light (UV) disinfection, the facilities shall be designed to meet the requirements of this subsection:

(A) The UV unit must achieve the dosage indicated in Table 32 for the required pathogen inactivation.

(B) Ultraviolet lamps are insulated from direct contact with the influent water and are removable from the lamp housing;

(C) The treatment unit must have an upstream valve or device that prevents flows from exceeding the manufacturer's maximum rated flow rate, an ultraviolet light sensor that monitors light intensity through the water during operation, and a visual and audible alarm;

(D) There must be a visual means to verify operation of all ultraviolet lamps;

(E) The lamps, lamp sleeves, housings and other equipment must be able to withstand the working pressures applied through the unit;

(F) The treatment facility must be sheltered from the weather and accessible for routine maintenance as well as routine cleaning and replacement of the lamp sleeves and cleaning of the sensor windows/lenses;

(G) The lamps must be changed as per the manufacturer's recommendation; and

(H) The treatment unit must have shut-off valves at both the inlet side and the outlet side of the treatment unit. There shall be no bypass piping around the treatment unit.

(I) Reactor validation testing. All water systems, except those specified in paragraph (5)(k)(J) of this rule, must use UV reactors that have undergone validation testing to determine the operating conditions under which the reactor delivers the UV dose required in OAR 333-061-0036(5)(c) (that is, validated operating conditions). These operating conditions must include flow rate, UV intensity as measured by a UV sensor, UV Transmittance, and UV lamp status.

(i) When determining validated operating conditions, water systems must account for the following factors: UV absorbance

by the water; lamp fouling and aging; measurement uncertainty of on-line sensors; UV dose distributions arising from the velocity profiles through the reactor; failure of UV lamps or other critical system components; and inlet and outlet piping or channel configurations of the UV reactor.

(ii) Validation testing must include the following: full scale testing of a reactor that conforms uniformly to the UV reactors used by the water system and inactivation of a test microorganism whose dose response characteristics have been quantified with a low pressure mercury vapor lamp.

(iii) The Authority may approve an alternative approach to validation testing.

(J) Non-Community water systems using only groundwater sources, and having minimal distribution systems as determined by the Authority, may use ultraviolet light as the only disinfectant when total coliforms but no *E. coli* have been detected in the source water. UV units must meet the specifications of a Class A UV system under the NSF Standard 55. The minimum ultraviolet light failsafe dosage set point shall be equivalent to 40 mW-s/cm^2 (40 mJ/cm^2) with a wavelength between 200 and 300 nanometers. The UV unit must automatically shut-off water flow if dosage drops below this failsafe set point.

(6) Finished water storage:

(a) Distribution reservoirs and treatment plant storage facilities for finished water shall be constructed to meet the following requirements:

(A) They shall be constructed of concrete, steel, wood or other durable material capable of withstanding external and internal forces which may act upon the structure;

(B) Ground-level reservoirs shall be constructed on undisturbed soil, bedrock or other stable foundation material capable of supporting the structure when full;

(C) Steel reservoirs, standpipes and elevated tanks shall be constructed in conformance with the AWWA Standards D100 and D103;

(D) Concrete reservoirs shall be provided with sufficient reinforcing to prevent the formation of cracks, and waterstops and dowels shall be placed at construction joints. Poured-in-place wall castings shall be provided where pipes pass through the concrete;

(E) Wooden reservoirs shall be redwood or other equally durable wood and shall be installed on a reinforced concrete base. Where redwood reservoirs are used, separate inlet and outlet pipes are required and the water entering the reservoir must be have a disinfectant continuously applied so as to result in a detectable residual in the water leaving the reservoir;

(F) Start-up procedures for new redwood tanks shall consist of filling the tank with a solution of water containing a minimum of two pounds of sodium carbonate per 1,000 gallons of water and retaining this solution in the tank a minimum of seven days before flushing;

(G) Where ground-level reservoirs are located partially below ground, the bottom shall be above the ground water table and footing drains discharging to daylight shall be provided to carry away ground water which may accumulate around the perimeter of the structure;

(H) The finished water storage capacity shall be increased to accommodate fire flows when fire hydrants are provided;

(I) Finished water storage facilities shall have watertight roofs;

(J) An access manhole shall be provided to permit entry to the interior for cleaning and maintenance. When the access manhole is on the roof of the reservoir there shall be a curbing around the opening and a lockable watertight cover that overlaps the curbing;

(K) Internal ladders of durable material, shall be provided where the only access manhole is located on the roof;

(L) Screened vents shall be provided above the highest water level to permit circulation of air above the water in finished water storage facilities;

(M) A drain shall be provided at the lowest point in the bottom, and an overflow of sufficient diameter to handle the maximum flow into the tank shall be provided at or near the top of the sidewall. The outlet ends of the drain and overflow shall be fitted with angle-flap valves or equivalent protection and shall discharge with an airgap to a watercourse or storm drain capable of accommodating the flow;

(N) A silt stop shall be provided at the outlet pipe;

(O) Where a single inlet/outlet pipe is installed and the reservoir floats on the system, provisions shall be made to insure an adequate exchange of water and to prevent degradation of the water quality and to assure the disinfection levels required in subparagraph (5)(c)(D) of this rule;

(P) A fence or other method of vandal deterrence shall be provided around distribution reservoirs;

(Q) When interior surfaces of finished water storage tanks are provided with a protective coating, the coating shall meet the requirements of NSF Standard 61 - Drinking Water System Components or equivalent.

(R) Reservoirs and clearwells that are to be used for disinfection contact time to treat surface water shall use a tracer study to determine the actual contact time. The Authority must approve procedures and protocols for the tracer study prior to the initiation of the study. The Authority recommends the US EPA Guidance Manual for Compliance with the Filtration and Disinfection Requirements for Public Water

Systems Using Surface Water Sources for a tracer study procedure and protocol.

(S) Reservoirs and clearwells that are to be used for disinfection contact time to treat surface water shall have a means to adequately determine the flow rate on the effluent line.

(b) Pressure tanks for finished water shall meet the following requirements:

(A) Pressure tanks shall be installed above normal ground surface;

(B) Bypass piping around the pressure tank shall be provided to permit operation of the system while the tank is being maintained or repaired;

(C) Pressure tanks greater than 1,000 gallons shall be provided with an access manhole and a water sight-glass.

(D) All pressure tanks shall be provided with a drain, a pressure gauge, an air blow-off valve, means for adding air and pressure switches for controlling the operation of the pump(s);

(E) Pressure tanks shall be constructed of steel or an alternative material provided the tank is NSF 61 certified and shall be designed for pressure at least 50 percent greater than the maximum system pressure anticipated.

(7) Pumping facilities:

(a) Wherever possible, booster pumps shall take suction from tanks and reservoirs to avoid the potential for negative pressures on the suction line which result when the pump suction is directly connected to a distribution main;

(b) Pumps which take suction from distribution mains for the purpose of serving areas of higher elevation shall be provided with a low pressure cut-off switch on the suction side set at no less than 20 psi;

(c) Suction lift at pumping stations shall be avoided as far as possible, and pumps shall be installed so that the suction line is under a positive head. If suction lift cannot be avoided, provision shall be made for priming with water which does not exceed maximum contaminant levels;

(d) Pumping stations shall be located above maximum anticipated 100-year (1 percent) flood level, and the area around the pumping station shall be graded so that surface drainage is away from the station;

(e) Pumping stations shall be of durable construction so as to protect the equipment from the elements. The door to the pumping station shall be lockable, and facilities for heating and lighting shall be provided. The floor of the pumping station shall be sloped to provide adequate drainage.

(8) Distribution systems:

(a) Wherever possible, distribution pipelines shall be located on public property. Where pipelines are required to pass through private property, easements shall be obtained from the property owner and shall be recorded with the county clerk;

(b) Pipe, pipe fittings, valves and other appurtenances utilized at Community water systems shall be manufactured, installed and tested in conformance with the latest standards of the American Water Works Association, NSF International or other equivalent standards acceptable to the Authority;

(c) In Community water systems, distribution mains located in public roadways or easements, and the portion of the service connections from the distribution main to the customer's property line or service meter where provided are subject to the requirements of these rules. The piping from the customer's property line, or the meter where provided, to the point of water use (the building supply line) is subject to the requirements of the State Plumbing Code;

(d) In all Public Water Systems where the system facilities and the premises being served are both on the same parcel of property, requirements relating to pipe materials and pipe installation shall comply with the State Plumbing Code;

(e) Distribution piping shall be designed and installed so that the pressure measured at the property line in the case of Community water systems, or at the furthest point of water use, in the case of a Transient Non-Community water system of the type described in subsection (d) of this section, shall not be reduced below 20 psi;

(f) Distribution piping shall be carefully bedded and fully supported in material free from rocks and shall be provided with a cover of at least 30 inches. Select backfill material shall be tamped in layers around and over the pipe to support and protect it. Large rocks or boulders shall not be used as backfill over the pipe;

(g) Provision shall be made at all bends, tees, plugs, and hydrants to prevent movement of the pipe or fitting;

(h) Wherever possible, dead ends shall be minimized by looping. Where dead ends are installed, or low points exist, blow-offs of adequate size shall be provided for flushing;

(i) Air-relief valves shall be installed at high points where air can accumulate. The breather tube on air-relief valves shall be extended above ground surface and provided with a screened, downward facing elbow;

(j) Yarn, oakum, lead or other material which may impair water quality shall not be used where it will be in contact with potable water;

(k) Nonconductive water pipe (plastic or other material) that is not encased in conductive pipe or casing must have an electrically conductive wire or other approved conductor for locating the pipe when the pipeline is underground. The wire shall be No. 18 AWG (minimum) solid copper with blue colored insulation. Ends of wire shall be accessible in water meter boxes, valve boxes or casings, or outside the foundation of buildings where the pipeline

enters the building. The distance between tracer lead access locations shall not be more than 1,000 feet. Joints or splices in wire shall be waterproof.

(l) Piping that is to be used for disinfection contact time shall be verified by plug flow calculations under maximum flow conditions.

(9) Crossings-Sanitary sewers and water lines:

(a) All reference to sewers in this section shall mean sanitary sewers;

(b) In situations involving a water line parallel to a sewer main or sewer lateral, the separation between the two shall be as indicated in Figure 1;

(c) In situations where a water line and a sewer main or sewer lateral cross, the separation between the two shall be as follows:

(A) Wherever possible, the bottom of the water line shall be 1.5 feet or more above the top of the sewer line and one full length of the water line shall be centered at the crossing;

(B) Where the water line crosses over the sewer line but with a clearance of less than 1.5 feet, the sewer line shall be exposed to the sewer line joints on both sides of the crossing to permit examination of the sewer pipe. If the sewer pipe is in good condition and there is no evidence of leakage from the sewer line, the 1.5-foot separation may be reduced. However, in this situation, the water supplier must center one length of the water line at the crossing and must prepare a written report of the findings and indicating the reasons for reducing the separation. If the water supplier determines that the conditions are not favorable or finds evidence of leakage from the sewer line, the sewer line shall be replaced with a full length of pipe centered at the crossing point, of PVC pressure pipe (ASTM D-2241, SDR 32.5), high-density PE pipe (Drisco pipe 1000), ductile-iron Class 50 (AWWA C-51), or other acceptable pipe; or the sewer shall be encased in a reinforced concrete jacket for a distance of 10 feet on both sides of the crossing.

(C) Where the water line crosses under the sewer line, the water supplier shall expose the sewer line and examine it as indicated in paragraph (9)(c)(B) of this rule. If conditions are favorable and there is no evidence of leakage from the sewer line, the sewer line may be left in place, but special precautions must be taken to assure that the backfill material over the water line in the vicinity of the crossing is thoroughly tamped in order to prevent settlement which could result in the leakage of sewage. In this situation, the water supplier must center one length of the water line at the crossing and must prepare a written report recording the manner in which the sewer line was supported at the crossing and the material and methods used in backfilling and tamping to prevent settlement of the sewer. If the water supplier determines that conditions are not favorable or finds evidence of

leakage from the sewer line, the provisions of paragraph (9)(c)(B) of this rule apply.

(d) When a water main is installed under a stream or other watercourse, a minimum cover of 30 inches shall be provided over the pipe. Where the watercourse is more than 15 feet wide, the pipe shall be of special construction with flexible watertight joints, valves shall be provided on both sides of the crossing so that the section can be isolated for testing or repair, and test cocks shall be provided at the valves.

Figure 1: Water Line-Sewer Line Separation

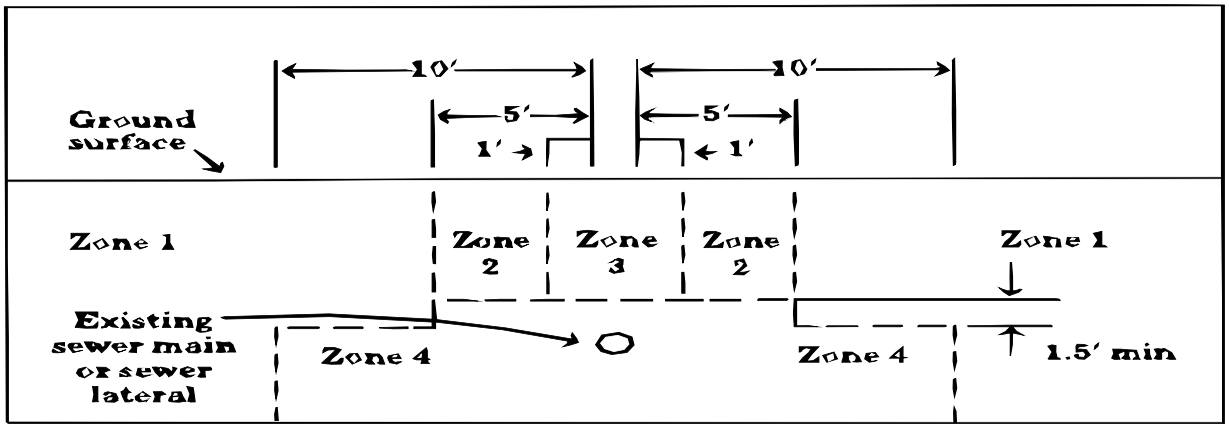

Zone 1: Only crossing restrictions apply;
Zone 2: Case-by-case determination;
Zone 3: Parallel water line prohibited;
Zone 4: Parallel water line prohibited;

(10) Disinfection of facilities:

(a) Following construction or installation of new facilities and repairs to existing facilities, those portions of the facilities which will be in contact with water delivered to users must be cleaned and flushed with potable water and disinfected according to AWWA Standards C651 through C654 before they are placed into service. Disinfection must be by chlorine unless another disinfectant can be demonstrated to be equally effective.

(b) For construction of new distribution pipelines (with any associated service connections and other appurtenances installed at the time of construction), disinfection by chlorination must be conducted as specified in paragraphs (A) through (C) of this subsection unless another method from AWWA Standard C651 is used.

(A) A solution with a free chlorine residual of 25 mg/l must be introduced to the pipe such that the solution will contact all surfaces and trapped air will be eliminated. The solution must remain in place for at least 24 hours.

(B) After 24 hours, if the free chlorine residual is 10 mg/l or greater, the chlorine solution must be drained and the pipe flushed with potable

water. If the free chlorine residual is less than 10 mg/l after 24-hours, the pipe must be flushed and rechlorinated until a free chlorine residual of 10 mg/l or more is present after a 24 hour period.

(C) After the pipe is disinfected, flushed and filled with potable water, bacteriological samples must be collected to determine the procedures' effectiveness. At least two samples must be collected from the new pipe at least 16 hours apart and analyzed for coliform bacteria. If the pipe has held potable water for at least 16 hours before sample collection, two samples may be collected at least 15 minutes apart while the sample tap is left running. If the results of both analyses indicate the water is free of coliform bacteria, the pipe may be put into service. If the either sample indicates the presence of coliform bacteria, the disinfection and flushing process must be repeated until samples are free of coliform.

(c) For repaired pipelines that were depressurized and wholly or partly dewatered during repair or that likely experienced contamination during repair, disinfection according to the procedure specified in paragraphs (10)(b)(A) through (C) of this rule must be followed except that bacteriological samples must be collected downstream of the repair site. If the direction of flow is unknown, samples must be collected on each side of the repair site.

(d) A water line may be returned to service, following repairs or routine maintenance, prior to receiving a report on the bacteriological analysis if the following procedures have been completed:

(A) Customer meters were shut off prior to placing the water line out of service;

(B) The area below the water line to be repaired was excavated and dewatered;

(C) The exposed pipe was treated with a hypochlorite solution;

(D) The water line was flushed thoroughly, and a concentration of residual chlorine has been re-established that is comparable to the level normally maintained by the water system, if applicable; and

(E) Bacteriological analysis has been conducted as a record of repair effectiveness.

(e) For reservoirs and tanks, disinfection by chlorination shall be accomplished according to AWWA Standard C652 which includes, but is not limited to, the following methods:

(A) Filling the reservoir or tank and maintaining a free chlorine residual of not less than 10 mg/l for the appropriate 6 or 24 hour retention period; or

(B) Filling the reservoir or tank with a 50 mg/l chlorine solution and leaving for six hours; or

(C) Directly applying by spraying or brushing a 200 mg/l solution to all surfaces of the storage facility in contact with water if the facility were full to the overflow elevation.

(f) When the procedures described in paragraphs (10)(e)(A) and (B) of this rule are followed, the reservoir or tank shall be drained after the prescribed contact period and refilled with potable water, and a sample taken for microbiological analysis. If the results of the analysis indicate that the water is free of coliform organisms, the facility may be put into service. If not, the procedure shall be repeated until a sample free of coliform organisms is obtained;

(g) When the procedure described in paragraph (10)(e)(C) of this rule is followed, the reservoir or tank shall be filled with potable water and a sample taken for microbiological analysis. It will not be necessary to flush the reservoir or tank after the chlorine solution is applied by spraying or brushing. Microbiological analysis shall indicate that the water is free of coliform organisms before the facility can be put into service;

(h) When a reservoir is chlorinated following routine maintenance, inspection, or repair, it may be put back into service prior to receiving the report on the microbiological analysis provided the water leaving the reservoir has a free chlorine residual of at least 0.4 mg/l or a combined chlorine residual of at least 2.0 mg/l.

(i) Underwater divers used for routine maintenance, inspection, or repair of reservoirs shall use a full body dry suit with hardhat scuba and an external air supply. The diver shall be disinfected by spraying a 200 mg/l solution of chlorine on all surfaces that will come into contact with drinking water.

Stat. Auth.: ORS 448.131
Stats. Implemented: ORS 448.131

333-061-0055
Waivers from Construction Standards

The Authority may grant waivers from the construction standards prescribed by these rules:

(1) When it is demonstrated to the satisfaction of the Authority that strict compliance with the rule would be highly burdensome or impractical due to special conditions or causes; and

(2) When the public or private interest in the granting of the waiver is found by the Authority to clearly outweigh the interest of the application of uniform rules; and

(3) When alternate measures are provided which, in the opinion of the Authority, will provide adequate protection to the health and safety of the public including the ability to produce water which does not exceed the maximum contaminant levels listed in OAR 333-061-0030.

Stat. Auth.: ORS 448.131
Stats. Implemented: ORS 448.131 & 448.135

333-061-0057
Voluntary Drinking Water Protection Program

(1) In accordance with OAR 340-040-0140 through 0200, a public water system or other responsible management authority that wishes to have a state certified drinking water protection program shall comply with the requirements prescribed in this rule.

(2) Delineation of the drinking water protection area (DWPA):

(a) Delineations will be accomplished for all Community, Non-transient Non Community and Transient Non Community water systems as part of the Safe Drinking Water Act's Source Water Assessment Program. Water systems may choose to complete or upgrade the delineations themselves. If so, they must comply with subsection (2)(b) of this rule;

(b) Delineation requirements for all groundwater sources are as follow:

(A) Delineations will be accomplished using a minimum TOT criterion of 10 years unless a hydrogeologic boundary is encountered at a shorter time of travel or as specified in subsection (2)(c) of this rule;

(B) Delineations will be accomplished by a registered geologist, engineering geologist or other licensed professional with demonstrated experience and competence in hydrogeology in accordance with ORS 672.505 through 672.705;

(C) Except as noted in subsection (2)(c) of this rule, a conceptual ground water model shall be developed for all public water systems participating in the voluntary drinking water protection program. The model shall be based on available information including, but not limited to, well reports, published reports and available unpublished reports and theses, etc. Sources of this information include the Water Resources Department, U. S. Geological Survey, Department of Geology and Mineral Industries, Department of Environmental Quality, university libraries and the Authority. The model shall include, but not be limited to, the identification and characterization of hydrogeologic units, determination of hydrogeologic boundaries, if any, areas of discharge and recharge and distribution of hydraulic head for the aquifer(s) of concern. The model shall also evaluate whether or not the porous media assumption is valid;

(D) The delineated DWPA and supporting documentation shall be submitted to the Authority for review and certification;

(E) Within 60 days of the receipt of the delineated drinking water protection area and supporting documentation, the Authority shall send a written acknowledgment of that receipt and an estimated date for review and certification of the delineation;

(F) The delineation techniques stipulated in this rule represent the minimum acceptable effort required for a state certified program. The use of a more sophisticated technique is acceptable.

(c) Springs. For water systems served by springs, hydrogeologic mapping shall be used to delineate the recharge area to the spring(s).

(d) Wells.

(A) All delineations for groundwater derived from wells shall use an adjusted pump rate (Q_a) that allows for potential growth using one of the methods described below, whichever yields the smallest value for Q_a:

(i) 125 percent of average pump rate as determined from the three months representing the highest usage; or

(ii) 125 percent of average pump rate as determined using a comparable community; or

(iii) The design capacity of the pump; or

(iv) 90 percent of the safe yield of the well.

(v) The water system's population times 200 gallons per day.

(B) For water systems serving a population 500 and using a single well, the minimum acceptable delineation method is a calculated fixed radius. Parameters considered in this technique include Q_a, effective porosity, open (screened or perforated) interval or thickness of the water-bearing zone(s), whichever is less, and a TOT of 15 years.

(C) For water systems serving a population of 501 to 3,300 or systems serving 500 with multiple wells, the DWPA(s) shall be delineated using a combination of an analytical technique and hydrogeologic mapping.

(D) For water systems serving a population >3,300, the conceptual model shall be refined using site-specific collected data. Data collected shall include, but not be limited to, measured static water levels for the purpose of generating a map of the appropriate potentiometric-or water table surface, and at a minimum a 24-hour constant-rate aquifer test. The well to be tested should remain idle for a period of 24 hours prior to the test. Water levels in the well should be monitored at appropriate intervals during the pre-pumping, pumping and recovery phases. Additional technical information is given in the **Oregon Wellhead Protection Guidance Manual** and the **1996 Oregon Source Water Assessment Guidance.**

(E) For water systems serving a population of 3,301 to 50,000, the DWPA(s) shall be delineated as provided in subsection (2)(c) of this rule, with the exception of using the site specific data collected in accordance with subsection (2)(c) of this rule.

(F) For water systems serving a population >50,000 and using wells, the DWPA(s) shall be delineated using numerical models or comparable analytical methods. The model must be calibrated using field observations and measurements of appropriate hydrogeologic parameters.

(e) Susceptibility Analysis. To guide the development of management strategies, the aquifer's susceptibility within the DWPA may be determined using the methods described in the Use and Susceptibility Waiver Guidance Document, the **1996 Oregon Source Water Assessment Guidance** or another pre-approved process. Additional technical information is available in the Oregon Wellhead Protection Guidance Manual.

(f) Delineation Update. The water system's DWPA delineation shall be re-examined every five years or during the sanitary survey for that system for potential revisions (OAR 340-040-0190). Factors that may require revision of a DWPA boundary include, but are not limited to the following:

(A) A significant change in the pumping rate;

(B) A significant change in recharge to the aquifer;

(C) Wells outside the control of the water system placed in a manner that could significantly modify the shape and/or orientation of the original DWPA.

(3) New and Future Groundwater Sources:

(a) New sources. With regard to the voluntary wellhead protection program, a new source is defined as an additional or modified well(s) and/or spring(s) that will be used by the water system.

(A) For new wells or springs outside an existing DWPA or deriving water from a different aquifer than that supplying other already delineated DWPAs, the following steps shall be completed:

(i) If more than one potential site is available, the water system or other responsible management authority shall conduct a provisional delineation and a preliminary potential contaminant source inventory for each site being considered in order to evaluate the long-term viability of each of the sites available; and

(ii) Delineate the chosen site as prescribed in section (2) of this rule. Further technical information is provided in the **Oregon Wellhead Protection Guidance Manual**.

(B) For new wells or springs inside an existing DWPA or potentially influencing an existing DWPA, the following steps shall be completed:

(i) Evaluate sites and delineate DWPA(s) as prescribed in subparagraphs (3)(a)(A)(i) and (ii) of this rule; and

(ii) Modify the existing wellhead protection plan to encompass modifications resulting from the new delineation.

(C) New wells or springs as defined in subsection (3)(a) of this rule shall comply with all appropriate construction standards as prescribed in OAR 333-061-0050 and shall comply with plan submission requirements as prescribed in OAR 333-061-0060.

(b) Future sources. A public water system or other responsible management authority that has recognized the need for future groundwater supplies beyond their current capacity may choose to identify the area where this future supply will be obtained in accordance with subparagraph (3)(a)(A)(i) of this rule.

(4) Contingency Planning:

(a) Public water systems shall develop or revise contingency plans for response to potential loss or reduction of their drinking water source(s). Key elements of the plan shall include, but not be limited to, the following:

(A) Inventory/prioritize all threats to the drinking water supply;

(B) Prioritize water usage;

(C) Anticipate responses to potential incidents;

(D) Identify key personnel and development of notification roster;

(E) Identify short-term and long-term replacement potable water supplies;

(F) Identify short-term and long-term conservation measures;

(G) Provide for plan testing, review and update;

(H) Provide for new and on-going training of appropriate individuals;

(I) Provide for education of the public; and

(J) Identify logistical and financial resources.

(b) Public water systems shall coordinate their contingency plan with the emergency response plans of the appropriate county and/or city and with the contingency plans developed by industries using hazardous materials within the wellhead protection area.

Stat. Auth.: ORS 448.131
Stats. Implemented: ORS 431.110, 431.150, 448.131, 448.150 & 448.273

333-061-0060
Plan Submission and Review Requirements

(1) Plan Submission:

(a) Construction and installation plans shall be submitted to and approved by the Authority before construction begins on new systems or major additions or modifications, as determined by the Authority, are made to existing systems. Plans shall be drawn to scale;

(b) Preliminary plans, pilot studies, master plans and construction plans shall be prepared by a Professional Engineer registered in Oregon, and submitted to the Authority unless exempted by the Authority (See OAR 333-061-0060(4));

(c) Plans shall set forth the following:

(A) Sufficient detail, including specifications, to completely and clearly illustrate what is to be constructed and how those facilities will meet the construction standards set forth in these regulations. Elevation or section views shall be provided where required for clarity;

(B) Supporting information attesting to the quality of the proposed source of water;

(C) Vicinity map of the proposed project relative to the existing system or established landmarks of the area;

(D) Name of the owner of the water system facilities during construction and the name of the owner and operator of the facilities after completion of the project;

(E) Procedures for cleaning and disinfecting those facilities which will be in contact with the potable water.

(d) Prior to drilling a well, a site plan shall be submitted which shows the site location, topography, drainage, surface water sources, specifications for well drilling, location of the well relative to sanitary hazards, dimensions of the area reserved to be kept free of potential sources of contamination, evidence of ownership or control of the reserve area and the anticipated depth of the aquifer from which the water is to be derived. The Authority will review well reports from the area and in consultation with the local watermaster and the well constructor as appropriate will recommend the depth of placement of the casing seal. After the well is drilled, the following documents shall be submitted to the Authority for review and approval: Well driller's report, report of the pump test which indicates that the well has been pumped for a sufficient length of time to establish the reliable yield of the well on a sustained basis, including data on the static water level, the pumping rate(s), the changes in drawdown over the duration of the test, the rate of recovery after the pump was turned off, reports on physical, chemical and microbiological quality of the well water, performance data on the well pump, a plan of the structure for protecting above-ground controls and appurtenances, and a plan showing how the well will be connected to the water system. (See OAR 333-061-0050(2)).

(e) Any community, non-transient non-community, or transient non-community water system that treats surface water or groundwater under the influence of surface water and that desires to make a significant change to its disinfection treatment process as defined by paragraphs (1)(e)(A) through (1)(e)(D) of this rule, is required to develop a disinfection profile and calculate a disinfection benchmark according to OAR 333-061-0036(4)(e). The water system must consult with and provide any additional information requested by the Authority prior to making such a change. The water system must develop a disinfection profile for *Giardia lamblia* and viruses, calculate a

disinfection benchmark, describe the proposed change in the disinfection process, and analyze the effect(s) of the proposed change on current levels of disinfection according to the USEPA Disinfection Profiling and Benchmarking Guidance Manual or the USEPA LT1-ESWTR Disinfection Profiling and Benchmarking Technical Guidance Manual and submit the information to the Authority for review and approval. Significant changes to the disinfection treatment process include:

(A) Changes to the point of application:

(B) Changes to the disinfectants used in the treatment process;

(C) Changes to the disinfection process;

(D) Any other modification identified by the Authority.

(f) A water system that uses either chloramines, chlorine dioxide, or ozone for primary disinfection, and that is required to prepare a disinfection profile for *Giardia lamblia* as prescribed by subsection (1)(e) of this rule, must also prepare a disinfection profile for viruses and calculate the logs of inactivation for viruses using the methods specified in OAR 333-061-0036(4)(l).

(2) Plan review:

(a) Upon receipt of plans, the Authority shall review the plans and either approve them or advise that correction or clarification is required. When the correction or clarification is received, and the item(s) in question are resolved, the Authority shall then approve the plans;

(b) Upon completion of a project, a professional engineer registered in Oregon shall submit to the Authority a statement certifying that the project has been constructed in compliance with the approved plans and specifications. When substantial deviations from the approved plans are made, as-built plans showing compliance with these rules shall be submitted to the Authority;

(c) Plans shall not be required for emergency repair of existing facilities. In lieu of plans, written notice shall be submitted to the Authority immediately after the emergency work is completed stating the nature of the emergency, the extent of the work and whether or not any threats to the water quality exists or existed during the emergency.

(3) Plan review fees: Plans submitted to the Authority shall be accompanied by a fee as indicated in Table 41. Those plans not accompanied by a fee will not be reviewed.

Table 41

Nature of Plan	Community Water System	Non-Community Water System
Water source	$3,300	$825
Water Treatment (full)	$3,300	$825
Disinfection	$825	$248
Corrosion Control	$825	$248

Distribution	$3,300	$825
Storage	$3,300	$825
Combination of two or more above	$4,125	$825
Master Plan	$4,125	$825
Corrosion Control study	$4,125	$825
As-built plans & certification statement	No fee if original plans reviewed	

(4) Plan review exemptions:

(a) Water suppliers may be exempted from submitting plans of main extensions, providing they:

(A) Have provided the Authority with a current master plan; and

(B) Certify that the work will be carried out in conformance with the construction standards of these rules; and

(C) Submit to the Authority an annual summary of the projects completed; and

(D) Certify that they have staff qualified to effectively supervise the projects.

(b) Those water suppliers certifying that they have staff qualified to effectively plan, design and supervise their projects, may request the Authority for further exemption from this rule. Such requests must be accompanied by a listing of staff proposed to accomplish the work and a current master plan. To maintain the exemption, the foregoing must be annually updated;

(c) At the discretion of the Authority, Community, Transient and Non-Transient Non-Community and State Regulated water systems may be exempted from submitting engineered plans. They shall, however, submit adequate plans indicating that the project meets the minimum construction standards of these rules.

(5) Master plans:

(a) Community water systems with 300 or more service connections shall maintain a current master plan. Master plans shall be prepared by a professional engineer registered in Oregon and submitted to the Authority for review and approval.

(b) Each master plan shall evaluate the needs of the water system for at least a twenty year period and shall include but is not limited to the following elements:

(A) A summary of the overall plan that includes the water quality and service goals, identified present and future water system deficiencies, the engineer's recommended alternative for achieving the goals and correcting the deficiencies, and the recommended implementation schedule and financing program for constructing improvements.

(B) A description of the existing water system which includes the service area, source(s) of supply, status of water rights, current status of

drinking water quality and compliance with regulatory standards, maps or schematics of the water system showing size and location of facilities, estimates of water use, and operation and maintenance requirements.

(C) A description of water quality and level of service goals for the water system, considering, as appropriate, existing and future regulatory requirements, nonregulatory water quality needs of water users, flow and pressure requirements, and capacity needs related to water use and fire flow needs.

(D) An estimate of the projected growth of the water system during the master plan period and the impacts on the service area boundaries, water supply source(s) and availability, and customer water use.

(E) An engineering evaluation of the ability of the existing water system facilities to meet the water quality and level of service goals, identification of any existing water system deficiencies, and deficiencies likely to develop within the master plan period. The evaluation shall include the water supply source, water treatment, storage, distribution facilities, and operation and maintenance requirements. The evaluation shall also include a description of the water rights with a determination of additional water availability, and the impacts of present and probable future drinking water quality regulations.

(F) Identification of alternative engineering solutions, environmental impacts, and associated capital and operation and maintenance costs, to correct water system deficiencies and achieve system expansion to meet anticipated growth, including identification of available options for cooperative or coordinated water system improvements with other local water suppliers.

(G) A description of alternatives to finance water system improvements including local financing (such as user rates and system development charges) and financing assistance programs.

(H) A recommended water system improvement program including the recommended engineering alternative and associated costs, maps or schematics showing size and location of proposed facilities, the recommended financing alternative, and a recommended schedule for water system design and construction.

(I) If required as a condition of a water use permit issued by the Water Resources Department, the Master Plan shall address the requirements of OAR 690-086-0120 (Water Management and Conservation Plans).

(c) The implementation of any portion of a water system master plan must be consistent with OAR 333-061 (Public Drinking Water Systems, Oregon Health Authority), OAR 660-011 (Public Facilities Planning, Department of

Land Conservation and Development) and OAR 690-086 (Water Management and Conservation Plans, Water Resources Department).

Stat. Auth.: ORS 448.131
Stats. Implemented: ORS 448.131

333-061-0061
Capacity Requirements for Public Water Systems

(1) Water system capacity is defined as the technical, managerial, and financial capability of the water system necessary to plan for, achieve, and maintain compliance with applicable drinking water standards.

(2) Capacity requirements for new public water systems.

(a) Any new community, non-transient non-community, or transient non-community public water system commencing operations on or after October 1, 1999, must meet the applicable requirements in this rule prior to serving drinking water to the public. The owner of such water system shall submit evidence of meeting all applicable requirements to the Authority for review and shall commence operation only after Authority approval. This rule does not apply to water systems that were built and operating prior to October 1, 1999.

(b) Requirements for Technical Capacity

(A) The water system must comply with the local land use requirements of OAR 333-061-0062, including submission to the Authority of evidence of approval by the local land use authority.

(B) The water system must comply with plan submission and review requirements of OAR 333-061-0060, and plans submitted must comply with construction standards in OAR 333-061-0050.

(C) The owner of a new water system must demonstrate a valid water right permit as required and prescribed by the Oregon Water Resources Department (ORS chapter 537).

(D) The water system must submit initial water quality test results demonstrating compliance with applicable Maximum Contaminant Levels (OAR 333-061-0030), and applicable treatment requirements and performance standards (OAR 333-061-0032 and 0034).

(E) Community water systems shall have water use meters installed at all service connections.

(F) Community water systems with 300 or more service connections shall have a master plan meeting the requirements of OAR 333-061-0060.

(c) Requirements for Managerial Capacity

(A) Community and non-transient non-community water systems must employ or contract for the services of a certified operator as required by OAR 333-061-0225.

(B) Community water systems within areas of Oregon where State or Federally listed sensitive, threatened or endangered fish species are

located, shall consult with the Oregon Water Resources Department. If required by the Oregon Water Resources Department, community water systems shall have water management and conservation plans meeting the requirements of Oregon Water Resources Department OAR 690-086-0010 through 0920.

(d) Requirements for Financial Capacity. The water system must establish a water rate structure and billing procedure, or alternate financial plan, to assure that funds are collected and available to meet the anticipated operation, maintenance, and replacement costs of the water system.

(3) Capacity requirements for public water systems applying for a loan from the Drinking Water State Revolving Loan Fund.

(a) All public water systems qualifying for a Drinking Water State Revolving Fund loan must receive a capacity assessment for technical and managerial capacity from the Authority, and financial capacity from the Oregon Economic & Community Development Department through the loan application process, prior to contract execution.

(b) All deficiencies identified in the capacity assessment must be corrected such that:

(A) Those deficiencies identified in the capacity assessment as major deficiencies must be corrected prior to contract execution. Major deficiencies include but are not limited to the following:

(i) Under technical capacity, major infrastructure deficiencies identified in the sanitary survey and not corrected as a part of this project or identified as a deficiency under paragraph (E) of this subsection; or

(ii) Under managerial capacity, no certified operator and no contract or agreement for operator services from another water system or management agency; or

(iii) Under financial capacity, inappropriate financial statements, lack of a capital financing program, or an inadequate rate structure to cover necessary system operation, debt service, or capital replacement.

(B) Those deficiencies identified in the capacity assessment as loan conditions must be corrected as a part of the contract prior to contract completion or on a schedule set and/or approved and tracked by the Authority or its designee. Loan condition deficiencies are deficiencies which may take considerable staff or contractor time and possibly some funding to correct. Loan condition deficiencies include but are not limited to the following:

(i) Under technical capacity, inadequate or no water rights, incomplete installation of water use meters, incomplete or no engineering drawings of the water system, out-of-date or no

master plan, or incomplete or no plan review on prior construction projects; or

(ii) Under managerial capacity, having an operator at a lower level than required in responsible charge of the water system, no written emergency response plan, no written water conservation program if required by the Water Resources Department under OAR 690-086-0010 through 690-086-0920, no written water system operations manual, or no cross connection program.

(C) Those deficiencies identified in the capacity assessment as short term deficiencies must be corrected prior to contract completion and will be tracked by the Authority. Short term deficiencies are deficiencies which can be quickly corrected with additional staff attention. Short term deficiencies include but are not limited to the following:

(i) Under technical capacity, water quality monitoring is incomplete, no coliform sample plan or site map, or no written water quality monitoring plan; or

(ii) Under managerial capacity, no annual cross connection summary report if required, or no consumer confidence report if required.

(D) Those deficiencies identified in the capacity assessment as corrected with the project will be considered by the Authority as corrected with contract completion.

(E) All other deficiencies identified in the capacity assessment must be identified and established as a future construction project in the water system master plan, feasibility study, or other such document in order to be considered by the Authority as corrected in the future.

(c) Funding to correct a deficiency identified as a loan condition under paragraph (b)(B) of this section may be included as part of the project contract under the Drinking Water State Revolving Fund, if that part of the project to correct the deficiency qualifies under the terms of the Drinking Water State Revolving Fund.

(4) Capacity requirements for other public water systems.

(a) All community, non-transient non-community, and transient non-community public water systems will receive capacity assessments conducted by or with the assistance of the Authority.

(A) The capacity assessment consists of a written report identifying deficiencies in technical, managerial, and financial capacity, and a letter listing recommendations to correct the deficiencies. The findings of the capacity assessment and recommendations for correction will be presented to the management of the water system at a regular or special meeting.

(B) The frequency of capacity assessments for a public water system, as described in this subsection, is dependent on the risk to human health as determined by the Authority.

(C) The recommendations for correction of deficiencies identified in capacity assessments are, or, become requirements for any public water system, as described in this subsection, with multiple violations of the drinking water standards, in significant non-compliance with the drinking water standards, or an Administrative Order issued by the Authority.

Stat. Auth.: ORS 448.131
Stats. Implemented: ORS 431.110, 431.150, 448.131, 448.150, 448.268, 448.273

333-061-0062
Land Use Coordination

(1) The purpose of this rule is to assure that Oregon Health Authority's actions taken pursuant to ORS 448.131 and OAR chapter 333, division 61, comply with state land use coordination requirements in ORS 197.180 and OAR chapter 660, divisions 30 and 31. This rule also implements applicable portions of the Authority's state agency coordination program concerning the review and approval of plans and projects pursuant to ORS 448.131.

(2) The requirements of OAR 333-061, shall apply to Authority approval of plans or projects submitted under ORS 448.131 for:

(a) New public water systems;

(b) Major additions, alterations, and extensions of water transmission mains;

(c) Development of new water sources; and

(d) Relocation of water treatment or storage facilities.

(3) In order to approve a plan or project listed under subsections (2)(a) through (d) of this rule, the Authority shall find that it complies with the Statewide Planning Goals and is compatible with applicable acknowledged city and county comprehensive plan and land use regulations. To make its goal compliance and plan compatibility findings, the Authority shall comply with sections (1) through (9) of this rule and shall also adhere to the procedures in the Authority's state agency coordination program which is hereby adopted by reference.

(4) Except where the Authority is required to directly address the Statewide Planning Goals, the Authority shall make its goal compliance findings for each plan or project listed in subsections (2)(a) through (d) of this rule based on the land use compatibility information provided to the Authority by the project applicant.

(5) An applicant seeking approval of a plan or project listed in subsections (2)(a) through (d) of this rule shall provide the Authority with information documenting the plan or project's compatibility with the applicable acknowledged comprehensive plans and land use regulations. Such documentation shall be submitted in a manner as established by the Authority and shall include one of the following:

(a) A copy of the local land use permit (e.g., conditional use permit, subdivision approval, zoning clearance, etc.) demonstrating that the plan or project has received land use approval from the jurisdiction; or

(b) Written information from an authorized representative of the affected city or county affirming that the proposed plan or project is compatible with the acknowledged comprehensive plan(s) for the area, but does not require specific land use approval by the jurisdiction; or

(c) Other written information acceptable to the Authority equivalent to subsection (5)(a) or (b) of this rule demonstrating the plan or project's land use compatibility.

(6) The Authority shall adopt findings directly against the Statewide Planning Goals if a situation ever arises where the Authority must approve a plan or project, but is unable to rely upon or is not provided with the appropriate land use compatibility information by the applicant. In this instance, the Authority shall comply with OAR 660-030-0065 and the corresponding procedures in the Authority's state agency coordination program to adopt the necessary findings demonstrating the plan or project's compliance with the Statewide Goals.

(7) Where more than one unit of local government has land use approval authority over the plan or site of the proposed project, written information from the applicant must be submitted to the Authority as provided in section (5) of this rule documenting the plan or project's compatibility with each of the affected jurisdiction's comprehensive plans.

(8) Information documenting land use compatibility in accordance with section (5) of this rule may be submitted to the Authority for public water system master plans or portions thereof. In this section, no subsequent land use compatibility determination will be required for an individual project where the applicant demonstrated that the project is contemplated by and consistent with the previously approved master plan.

(9) The meaning of land use terms used in this rule shall be as defined in OAR 660-030-0005.

Stat. Auth.: ORS 197.180 & 448.131
Stats. Implemented: ORS 197.180 & 448.131

333-061-0063
Environmental Review Process for The Safe Drinking Water Revolving Loan Fund Program

(1) This rule provides for environmental review of actions that are funded through the Safe Drinking Water Revolving Loan Fund (SDWRLF). This rule is applied in a manner that is consistent with 40 CFR Part 6, Subpart E and related subparts (July 1, 1997). An applicant for funding from the SDWRLF shall consult with the Authority at an early stage in the preparation of an application to determine the required level of environmental review. Based on review of existing information,

the Authority shall assess the potential environmental effects of the proposed action and shall instruct the applicant either to:

(a) Submit a request for a categorical exclusion in a format specified by the Authority;

(b) Prepare and submit an environmental information document (EID) in a format specified by the Authority; or

(c) Prepare and submit an environmental impact report (EIR) in a format specified by the Authority.

(2) Categorical exclusions:

(a) Categorical exclusions are categories of actions proposed for funding from the SDWRLF, which do not individually, cumulatively over time, or in conjunction with other actions, have a significant effect on the quality of the human environment, and have been identified by the Authority as having no such effect. Such actions may be excluded by the Authority from further environmental review requirements if the information provided by the water supplier and any additional information before the Authority does not identify any environmental effects of the action that warrant additional environmental review by the Authority. The following actions may be categorically excluded by the Authority:

(A) Actions solely directed toward minor rehabilitation of existing facilities, functional replacement of equipment, or toward the construction of new ancillary facilities adjacent or appurtenant to existing facilities;

(B) Actions in sewered communities with a population of 10,000, or less, which are for minor upgrading or minor expansion of existing drinking water systems. This category does not include actions that directly or indirectly involve new drinking water sources, or the extension of new water distribution systems;

(C) Actions in unsewered communities with a population of 10,000 or less, that do not include the development of new drinking water sources, and that will not result in any increase in or change to the rate, nature or location of water diversion or discharge to surface water.

(b) In addition to the criteria set forth in subsection (a) of this rule, categorical exclusions will not be granted if the proposed action meets the criteria for not granting such exclusions in 40 CFR 6.107(e) or 6.505(c) (July 1, 1997). In addition, in order to qualify for a categorical exclusion, the action must be compatible with applicable acknowledged comprehensive plans and land use regulations, which must be documented according to the requirements of OAR 333-061-0062(5) and (7).

(c) A categorical exclusion may be revoked by the Authority and an environmental review required if the proposed action no longer meets the

requirements for a categorical exclusion due to changes in the proposed action, or if the Authority determines from new information that significant environmental effects may result from the proposed action.

(d) If a categorical exclusion is granted, and a notice of the exclusion has been published in a newspaper of general circulation in the geographical area of the proposed action, the action can proceed.

(3) Environmental review process:

(a) When issuance of a categorical exclusion is not appropriate, the applicant shall prepare an EID or an EIR, as required by the Authority. The EID or EIR shall consider practicable alternatives to the proposed action (including a no-action alternative), as well as the proposed action.

(b) The EIR or EID shall contain an evaluation of applicable laws relating to significant environmental resources that may be affected by the proposed action and alternatives to the proposed action. The applicant shall consult with appropriate federal, state and local agencies regarding such laws.

(c) The EIR or EID shall consider a full range of relevant impacts (both direct and indirect, and current and future impacts) of the proposed action and alternatives to the proposed action, including measures to mitigate adverse impacts, cumulative impacts, and impacts that cause irreversible or irretrievable commitment of resources.

(d) If the Authority requires an EID, the applicant shall prepare and the Authority shall review a draft EID. Following its review, the Authority shall either request additional information regarding potential impacts of the proposed action, or shall accept the EID as final. Once the Authority accepts the EID, the Authority shall prepare an environment assessment (EA) of the proposed action based on the EID and any other supplemental information deemed necessary by the Authority. Based on the EA and any measures to mitigate or eliminate adverse effects of the proposed action on the environment (which measures shall be included as a condition of any loan award as set forth in section (4) of this rule), the Authority will either prepare and issue a Finding of No Significant Impact (FNSI) or require the preparation of an EIR under subsection (3)(e) of this rule. In determining whether to issue a FNSI, the Authority shall apply the criteria set forth in 40 CFR 6.509, 6.108(a) and 6.108 (c through g) (July 1, 1997). If the Authority determines to issue a FNSI, notice of the FNSI shall be published in a newspaper of general circulation in the geographical area of the proposed action. Following a period of at least thirty (30) days after publication of the notice, and after any public concerns about the impacts of the proposed action are resolved to the extent determined to be appropriate by the Authority, the Authority may issue a final FNSI, and the action can proceed.

(e) If the Authority requires an EIR:

(A) The applicant shall conduct a duly noticed public meeting regarding the proposed action, which may be combined with other public hearings or meetings regarding the proposed action;
(B) The applicant shall prepare and submit a draft EIR to all interested agencies and persons, for review and comment;
(C) The applicant shall prepare and submit a final EIR that responds to agency and public comments for Authority review and decision;
(D) The Authority, following its review of the EIR, shall determine whether the action may proceed. In the event the Authority determines the action may proceed following completion of an EIR, it shall specify in writing what mitigation measures, if any, are to be required.

(4) In the event the Authority determines the action may proceed following preparation of an EID or an EIR, the Authority shall ensure that mitigation measures identified in its review as required for the issuance of a FNSI or otherwise, are implemented. This may be done by incorporating such measures as conditions of any loan agreement, or otherwise as the Authority determines will best ensure their completion in a timely manner.

(5) Under appropriate circumstances, the Authority may allow the partitioning of environmental review such that the environmental review will be required for only a component/portion of a planned system instead of completing an environmental review for the remainder of the system(s). In determining whether to approve partitioning of environmental review, the Authority shall consider 40 CFR Section 6.507 (July 1, 1997).

(6) Waiver; validity:
(a) If environmental review for the proposed action has already been conducted by another government agency, the Authority may, in its discretion, waive the requirements of this rule.
(b) Environmental reviews may be valid for up to five years. If a loan application is received for an action with an environmental review that is more than five years old, the Authority shall require a new or supplemental environmental review in accordance with these rules.

Stat. Auth.: ORS 448.131
Stats. Implemented: ORS 448.131

333-061-0064
Emergency Response Plan Requirements

All public water systems shall maintain a current emergency response plan.

(1) The emergency response plan shall be completed according to the following schedule and shall be reviewed and updated at least every five years.
(a) Completed by September 30, 2003 for public water systems serving 100,000 population or more.
(b) Completed by June 30, 2004 for public water systems serving a population of 50,000 or more but less than 100,000.

(c) Completed by December 31, 2004 for public water systems serving a population greater than 3,300 but less than 50,000.

(d) Completed by June 30, 2005 for public water systems serving a population of 3,300 or less.

(e) If a public water system applying for funds from the Safe Drinking Water Revolving Loan Fund Program is required to develop an emergency response plan as a part of a capacity assessment, then the emergency response plan is required to be completed before final payout of the loan.

(2) All public water systems shall complete a security vulnerability assessment and develop a prioritized plan for risk reduction.

(3) As evidence of completion, all public water systems shall submit a statement to the Authority certifying that the Emergency Response Plan and vulnerability assessment have been completed according to the requirements of this rule and that staff have been instructed in the use of the emergency response plan. The emergency response plan/vulnerability assessment shall be made available for review by the Authority and/or the County Health Department. All Community water systems > 3,300 population are required to submit a copy of their Vulnerability Assessment and certification of completion for their Emergency Response Plan and Vulnerability Assessment to EPA as required in the federal Bioterrorism Preparedness and Response Act of 2002.

(4) Community water systems shall coordinate with the lead with County Emergency Coordinator when preparing or revising an emergency response plan.

(5) The emergency response plan shall include but is not limited to the following elements:

(a) Communications and authority

(A) Develop an emergency contacts list, and review and update this list at least annually.

(B) Decision-making authorities and responsibilities of water system personnel shall be determined and detailed in the emergency response plan.

(C) Procedure for notification of agencies, the water users, and the local media.

(b) Water system security Public water systems shall develop a security program. The security program shall include, but is not limited to, the following components: security management, physical activity, physical security, chemical storage and use, personnel, computer system, and program evaluation as defined in the State Model Emergency Response Plan.

(c) Water system hazard review

(A) Public water systems shall conduct an inspection of the water system annually to identify the hazards that could affect the water system.

(B) Public water systems shall correct construction deficiencies to eliminate hazards or potential hazards, correct major sanitary survey deficiencies as determined by the Authority, and perform regular maintenance.

(d) Emergency equipment and water supplies.

(A) Public water systems shall make provisions for an auxiliary power supply if not a gravity system, and redundant equipment for critical components. Community water systems shall identify equipment that can be utilized in the event of an intentional attack which can render harmless or significantly lessen the impact of the attack on the public health and safety and supply of public drinking water.

(B) Public water systems shall develop a plan for emergency water to include the rationing of drinking water, identifying and utilizing alternative drinking water sources and supplies, and alternative distribution of drinking water.

(e) Emergency response procedures

(A) Public water systems shall develop procedures for responding to emergencies most likely to strike the water system. Community water systems shall develop plans and procedures that can be implemented in the event of a terrorist or other intentional attack on the water system.

(B) The emergency response plan shall describe procedures to isolate all parts of the water system. Community water systems shall develop actions and procedures which can render harmless or significantly lessen the impact of terrorist attacks or other intentional actions on public health and safety and supply of public drinking water.

(C) The emergency response plan shall describe the emergency disinfection procedure, process for issuing a boil water advisory, and process for handling a waterborne disease outbreak.

(6) Water system staff shall be instructed and trained in the use of the emergency response plan.

Stat. Auth.: ORS 448.131
Stats. Implemented: ORS 448.131, 448.160

333-061-0065
Operations and Maintenance

(1) Public water systems shall be operated and maintained in a manner that assures continuous production and delivery of potable water by:

(a) Operating all phases and components of the system effectively in the manner for which they were designed;

(b) Assuring that all leaks are promptly repaired and, broken or malfunctioning equipment is promptly repaired or replaced;

(c) Making readily available and in good condition the proper equipment, tools and parts to make repairs to the system. When possible, notice shall be given to the water users of impending repairs that will affect the quality of the water or the continuity of the water service. All repairs must meet the construction standards of these rules and comply with disinfection requirements of OAR 333-061-0050 prior to reestablishing use of the repaired portion of the system;

(d) Implementing actions to assure safe drinking water during emergencies. Water suppliers seeking a state certified wellhead protection program for their water system shall comply with the contingency planning requirements as prescribed in OAR 333-061-0057(4).

(2) Personnel:

(a) Personnel responsible for maintenance and operation of public water systems shall be competent, knowledgeable of all the functions of that particular facility and shall have the training and experience necessary to assure continuous delivery of water which does not exceed the maximum contaminant levels;

(b) Certification as prescribed by OAR 333-061-0210 through 333-061-0272 is required for personnel in direct responsible charge of operations for all community and non-transient non-community water systems.

(c) Personnel responsible for operating water treatment plants at transient non-community water systems using water sources classified as surface water or groundwater under the direct influence of surface water must attend the Authority's "Essentials of Surface Water Treatment" training course or an equivalent training.

(3) The identity of ownership of a water system shall be filed with the Authority. Notification of changes in ownership shall be filed immediately with the Authority upon completion of the transaction.

(4) All public water systems must maintain a current water system operations manual.

(a) The water system operations manual shall be completed according to the requirements of the capacity assessment or sanitary survey and shall be reviewed and updated at least every five years. If a public water system applying for funds from the Safe Drinking Water Revolving Loan Fund Program is required to develop a water system operations manual as a part of a capacity assessment, then the water system operations manual is required to be completed before final payout of the loan.

(b) As evidence of completion, public water systems shall submit a statement to the Authority certifying that the water system operations manual has been completed according to the requirements in this rule, and that staff have been instructed in the use of the water system operations manual.

(c) The water system operations manual shall include, but is not limited to, the following elements if they are applicable:

(A) Source operation and maintenance;
(B) Water treatment operation and maintenance;
(C) Reservoir operation and maintenance;
(D) Distribution system operation and maintenance; and
(E) Written protocols for on-site operators describing the operational decisions the operator is allowed to make under OAR 333-061-0225.

(d) Water system staff shall be instructed and trained in the use of the water system operations manual.

(5) Documents and records:

(a) The following documents and records shall be retained by the water supplier at community water systems and shall be available when the system is inspected or upon request by the Authority:

(A) Complete and current as-built plans and specifications of the entire system and such other documents as are necessary for the maintenance and operation of the system;
(B) Current operating manuals covering the general operation of each phase of the water system;
(C) A current master plan and revisions thereof;
(D) Data showing production capabilities of each water source and system component;
(E) Current records of the number, type and location of service connections;
(F) Current records of raw water quality, both chemical and microbiological;
(G) Current records of all chemicals and dosage rates used in the treatment of water;
(H) Reports on maintenance work performed on water treatment and delivery facilities;
(I) Records relating to the sampling and analysis undertaken to assure compliance with the maximum contaminant levels;
(J) Record of residual disinfectant measurements, where applicable;
(K) Records of cross connection control and backflow prevention device testing, where applicable;
(L) Records of customer complaints pertaining to water quality and follow-up action undertaken;
(M) Fluoridation records, where applicable;
(N) Other records as may be required by these rules.

(6) Water Treatment Operations:

(a) Chlorinators and other equipment used to apply chemicals at a public water system shall be operated and maintained in accordance with the manufacturers' specifications and recommendations for efficient operation and safety.

(b) When chlorine is used as the disinfectant, the procedures shall be as follows:
  (A) Chlorine shall be applied in proportion to the flow;
  (B) For reasons other than the treatment of surface water sources or groundwater sources under the direct influence of surface water, the rate of application shall be sufficient to result in a free chlorine residual of at least 0.2 mg/l after a 30-minute contact time and throughout the distribution system;
(c) When ammonia is added to the water with the chlorine to form a chloramine as the disinfectant, for reasons other than the treatment of surface water sources or groundwater sources under the direct influences of surface water, the rate of application shall result in a combined chlorine residual of at least 2.0 mg/l after a three-hour contact time;
(d) When corrosion control chemicals are applied to achieve compliance with the action levels for lead and copper, the point of application shall be after all other treatment processes, unless determined otherwise by the Authority.
(e) At water systems where cartridge filters are used, the filters must be changed according to the manufacturer's recommended pressure differential.

(7) When an emergency arises within a water system which affects the quality of water produced by the system, the water supplier shall notify the Authority immediately.

(8) Water suppliers must complete an Authority approved start-up procedure prior to serving water to the public at all seasonal water systems as defined in OAR 333-061-0020(168). The start-up procedure may include a requirement to conduct additional monitoring at the discretion of the Authority. A water supplier may be exempted from some or all of the requirements related to start-up of a seasonal water system if the entire distribution system remains pressurized during the entire period that the water system is not operating. Failing to complete an Authority-approved start-up procedure at a seasonal water system prior to serving water to the public is a violation of treatment technique requirements and of this rule.

Stat. Auth.: ORS 448.131
Stats. Implemented: ORS 448.131

333-061-0070
Cross Connection Control Requirements

(1) Water suppliers shall undertake cross connection control programs to protect the public water systems from pollution and contamination.

(2) The water supplier's responsibility for cross connection control shall begin at the water supply source, include all public treatment, storage, and distribution facilities under the water supplier's control, and end at the point of delivery to the water user's premises.

(3) Water suppliers shall develop and implement cross connection control programs that meet the minimum requirements set forth in these rules.

(4) Water suppliers shall develop a procedure to coordinate cross connection control requirements with the appropriate local administrative authority having jurisdiction.

(5) The water supplier shall ensure that inspections of approved air gaps, approved devices, and inspections and tests of approved backflow prevention assemblies protecting the public water system are conducted:

(a) At the time of installation, any repair or relocation;

(b) At least annually;

(c) More frequently than annually for approved backflow prevention assemblies that repeatedly fail, or are protecting health hazard cross connections, as determined by the water supplier;

(d) After a backflow incident; or

(e) After an approved air gap is re-plumbed.

(6) Approved air gaps, approved devices, or approved backflow prevention assemblies, found not to be functioning properly shall be repaired, replaced or re-plumbed by the water user or premises owner, as defined in the water supplier's local ordinance or enabling authority, or the water supplier may take action in accordance with subsection (9)(a) of these rules.

(7) A water user or premises owner who obtains water from a water supplier must notify the water supplier if they add any chemicals or substance to the water.

(8) Premises isolation requirements:

(a) For service connections to premises listed or defined in Table 42 (Premises Requiring Isolation), the water supplier shall ensure an approved backflow prevention assembly or an approved air gap is installed;

(A) Premises with cross connections not listed or defined in Table 42 (Premises Requiring Isolation), shall be individually evaluated. The water supplier shall require the installation of an approved backflow prevention assembly or an approved air gap commensurate with the degree of hazard on the premises, as defined in Table 43 (Backflow Prevention Methods);

(B) In lieu of premise isolation, the water supplier may accept an in-premises approved backflow prevention assembly as protection for the public water system when the approved backflow prevention assembly is installed, maintained and tested in accordance with these rules.

(b) Where premises isolation is used to protect against a cross connection, the following requirements apply;

(A) The water supplier shall:

(i) Ensure the approved backflow prevention assembly is installed at a location adjacent to the service connection or point of delivery;

(ii) Ensure any alternate location used must be with the approval of the water supplier and must meet the water supplier's cross connection control requirements; and

(iii) Notify the premises owner and water user, in writing, of thermal expansion concerns.

(B) The premises owner shall:

(i) Ensure no cross connections exist between the point of delivery from the public water system and the approved backflow prevention assemblies, when these are installed in an alternate location; and

(ii) Assume responsibility for testing, maintenance, and repair of the installed approved backflow prevention assembly to protect against the hazard.

(c) Where unique conditions exist, but not limited to, extreme terrain or pipe elevation changes, or structures greater than three stories in height, even with no actual or potential health hazard, an approved backflow prevention assembly may be installed at the point of delivery; and

(d) Where the water supplier chooses to use premises isolation by the installation of an approved backflow prevention assembly on a one- or two-family dwelling under the jurisdiction of the Oregon Plumbing Specialty Code and there is no actual or potential cross connection, the water supplier shall:

(A) Install the approved backflow prevention assembly at the point of delivery;

(B) Notify the premises owner and water user in writing of thermal expansion concerns; and

(C) Take responsibility for testing, maintenance and repair of the installed approved backflow prevention assembly.

(9) In community water systems, water suppliers shall implement a cross connection control program directly, or by written agreement with another agency experienced in cross connection control. The local cross connection program shall consist of the following elements:

(a) Local ordinance or enabling authority that authorizes discontinuing water service to premises for:

(A) Failure to remove or eliminate an existing unprotected or potential cross connection;

(B) Failure to install a required approved backflow prevention assembly;

(C) Failure to maintain an approved backflow prevention assembly; or

(D) Failure to conduct the required testing of an approved backflow prevention assembly.

(b) A written program plan for community water systems with 300 or more service connections shall include the following:

(A) A list of premises where health hazard cross connections exist, including, but not limited to, those listed in Table 42 (Premises Requiring Isolation);
(B) A current list of certified cross connection control staff members;
(C) Procedures for evaluating the degree of hazard posed by a water user's premises;
(D) A procedure for notifying the water user if a non-health hazard or health hazard is identified, and for informing the water user of any corrective action required;
(E) The type of protection required to prevent backflow into the public water supply, commensurate with the degree of hazard that exists on the water user's premises, as defined in Table 43 (Backflow Prevention Methods);
(F) A description of what corrective actions will be taken if a water user fails to comply with the water supplier's cross connection control requirements;
(G) Current records of approved backflow prevention assemblies installed, inspections completed, backflow prevention assembly test results on backflow prevention assemblies and verification of current Backflow Assembly Tester certification; and
(H) A public education program about cross connection control.

(c) The water supplier shall prepare and submit a cross connection control Annual Summary Report to the Authority, on forms provided by the Authority, before the last working day of March each year.

(d) In community water systems having 300 or more service connections, water suppliers shall ensure at least one person is certified as a Cross Connection Control Specialist, unless specifically exempted from this requirement by the Authority.

(10) Fees: Community water systems shall submit to the Authority an annual cross connection program implementation fee, based on the number of service connections, as follows:

Service Connections	—	Fee:
15-99	—	$30.
100-999	—	$75.
1,000-9,999	—	$200.
10,000 or more	—	$350.

(a) Billing invoices will be mailed to water systems in the first week of November each year and are due by January first of the following year;
(b) Fees are payable to Oregon Health Authority by check or money order;
(c) A late fee of 50 percent of the original amount will be added to the total amount due and will be assessed after January 31 of each year.

(11) In transient or non-transient non-community water systems, the water supplier that owns or operates the system shall:
   (a) Ensure no cross connections exist, or are isolated from the potable water system with an approved backflow prevention assembly, as required in section (12) of this rule;
   (b) Ensure approved backflow prevention assemblies are installed at, or near, the cross connection; and
   (c) Conduct an annual cross connection survey and inspection to ensure compliance with these rules, and test all backflow assemblies annually. All building permits and related inspections are to be made by the Department of Consumer and Business Services, Building Codes Division, as required by ORS 447.020.

(12) Approved backflow prevention assemblies and devices required under these rules shall be approved by the University of Southern California, Foundation for Cross-Connection Control and Hydraulic Research, or other equivalent testing laboratories approved by the Authority.

(13) Backflow prevention assemblies installed before the effective date of these rules that were approved at the time of installation, but are not currently approved, shall be permitted to remain in service provided the assemblies are not moved, the piping systems are not significantly remodeled or modified, the assemblies are properly maintained, and they are commensurate with the degree of hazard they were installed to protect. The assemblies must be tested at least annually and perform satisfactorily to the testing procedures set forth in these rules.

(14) Tests performed by Authority-certified Backflow Assembly Testers shall be in conformance with procedures established by the University of Southern California, Foundation for Cross Connection Control and Hydraulic Research, Manual of Cross-Connection Control, 10th Edition, or other equivalent testing procedures approved by the Authority.

(15) Backflow prevention assemblies shall be tested by Authority-certified Backflow Assembly Testers, except as otherwise provided for journeyman plumbers or apprentice plumbers in OAR 333-061-0072 of these rules (Backflow Assembly Tester Certification). The Backflow Assembly Tester must produce three copies of all test reports. One copy must be maintained in the Tester's permanent records, one copy must be provided to the water user or property owner, and one copy must be provided to the water supplier.
   (a) Test reports must be provided within 10 working days; and
   (b) The test reports must be in a manner and form acceptable to the water supplier.

(16) All approved backflow prevention assemblies subject to these rules shall be installed in accordance with OAR 333-061-0071 and the Oregon Plumbing Specialty Code.

(17) The Authority shall establish an advisory board for cross connection control issues consisting of not more than nine members, and including representation from the following:
- (a) Oregon licensed Plumbers;
- (b) Authority certified Backflow Assembly Testers;
- (c) Authority certified Cross Connection Specialists;
- (d) Water Suppliers;
- (e) The general public;
- (f) Authority certified Instructors of Backflow Assembly Testers or Cross Connection Specialists;
- (g) Backflow assembly manufacturers or authorized representatives;
- (h) Engineers experienced in water systems, cross connection control or backflow prevention; and
- (i) Oregon certified Plumbing Inspectors.

Table 42

Premises Requiring Isolation* By an Approved Air Gap **or** Reduced Pressure Principle Type Of Assembly Health Hazard
Agricultural (for example, farms, dairies)
Beverage bottling plants**
Car washes
Chemical plants
Commercial laundries and dry cleaners
Premises where both reclaimed and potable water are used
Film processing plants
Food processing plants
Medical centers (for example, hospitals, medical clinics, nursing homes, veterinary clinics, dental clinics, blood plasma centers)
Premises with irrigation systems that use the water supplier's water with chemical additions (for example, parks, playgrounds, golf courses, cemeteries, housing estates)
Laboratories
Metal plating industries
Mortuaries
Petroleum processing or storage plants
Piers and docks
Radioactive material processing plants and nuclear reactors
Wastewater lift stations and pumping stations
Wastewater treatment plants
Premises with piping under pressure for conveying liquids other than potable water and the piping is installed in proximity to potable water piping
Premises with an auxiliary water supply that is connected to a potable water supply
Premises where the water supplier is denied access or restricted access for survey
Premises where the water is being treated by the addition of chemical or other additives

* Refer to OAR 333-061-0070(8) premises isolation requirements.
** A Double Check Valve Backflow Prevention Assembly could be used if the water supplier determines there is only a non-health hazard at a beverage bottling plant.

Table 43

Backflow Prevention Methods Used For Premises Isolation	
DEGREE OF IDENTIFIED HAZARD	
Non-Health Hazard (Pollutant)	Health Hazard (Contaminant)
Backsiphonage or Backpressure	Backsiphonage or Backpressure
Air Gap (AG)	Air Gap (AG)
Reduced Pressure Principle Backflow Prevention Assembly (RP)	Reduced Pressure Principle Backflow Prevention Assembly (RP)
Reduced Pressure Principle-Detector Backflow Prevention Assembly (RPDA)	Reduced Pressure Principle-Detector Backflow Prevention Assembly (RPDA)
Double Check Valve Backflow Prevention Assembly (DC)	
Double Check-Detector Backflow Prevention Assembly (DCDA)	

Stat. Auth.: ORS 448.131
Stats. Implemented: ORS 448.131, 448.278,

333-061-0071
Backflow Prevention Assembly Installation and Operation Standards

(1) Any approved backflow prevention assembly required by OAR 333-061-0070 shall be installed in a manner that:
   (a) Facilitates its proper operation, maintenance, inspection, and in-line testing using standard installation procedures approved by the Authority, such as, but not limited to, University of Southern California, Manual of Cross-Connection Control, 10th Edition, the Pacific Northwest Section American Water Works Association, Cross Connection Control Manual, 7th Edition, or the local administrative authority having jurisdiction;
   (b) Precludes the possibility of continuous submersion of an approved backflow prevention assembly, and precludes the possibility of any submersion of the relief valve on a reduced pressure principle backflow prevention assembly; and
   (c) Maintains compliance with all applicable safety regulations and the Oregon Plumbing Specialty Code.

(2) For premises isolation installation:
   (a) The approved backflow prevention assembly shall be installed at a location adjacent to the service connection or point of delivery; or
   (b) Any alternate location must be with the advance approval of the water supplier and must meet the water supplier's cross connection control requirements; and

(c) The premises owner shall ensure no cross connections exist between the point of delivery from the public water system and the approved backflow prevention assembly.

(3) Bypass piping installed around any approved backflow prevention assembly must be equipped with an approved backflow prevention assembly to:

(a) Afford at least the same level of protection as the approved backflow prevention assembly being bypassed; and

(b) Comply with all requirements of these rules.

(4) All Oregon Plumbing Specialty Code approved residential multi-purpose fire suppression systems constructed of potable water piping and materials do not require a backflow prevention assembly.

(5) Stand-alone fire suppression systems shall be protected commensurate with the degree of hazard, as defined in Table 43 (Backflow Prevention Methods).

(6) Stand-alone irrigation systems shall be protected commensurate with the degree of hazard, as defined in Table 43 (Backflow Prevention Methods).

(7) A Reduced Pressure Principle Backflow Prevention Assembly (RP) or Reduced Pressure Principle-Detector Backflow Prevention Assembly (RPDA):

Figure 1

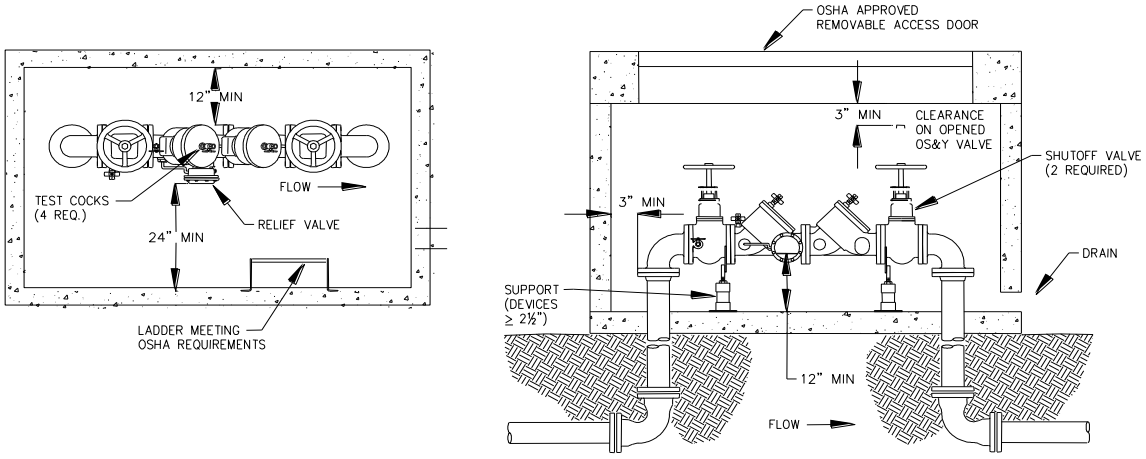

(a) Shall conform to bottom and side clearances when the assembly is installed inside a building. Access doors may be provided on the top or sides of an above-ground vault;

(b) Shall always be installed horizontally, never vertically, unless they are specifically approved for vertical installation;

(c) Shall always be installed above the 100 year (1 percent) flood level unless approved by the appropriate local administrative authority having jurisdiction;

(d) Shall never have extended or plugged relief valves;

(e) Shall be protected from freezing when necessary;

(f) Shall be provided with an approved air gap drain;

(g) Shall not be installed in an enclosed vault or box unless a bore-sighted drain to daylight is provided;

(h) May be installed with reduced clearances if the pipes are two inches in diameter or smaller, are accessible for testing and repairing, and approved by the appropriate local administrative authority having jurisdiction;

(i) Shall not be installed at a height greater than five feet unless there is a permanently installed platform meeting Oregon Occupational Safety and Health Administration (OR-OSHA) standards to facilitate servicing the assembly; and

(j) Be used to protect against a non-health hazard or health hazard for backsiphonage or backpressure conditions.

(8) A Double Check Valve Backflow Prevention Assembly (DC) or Double Check Detector Backflow Prevention Assembly (DCDA):

Figure 2

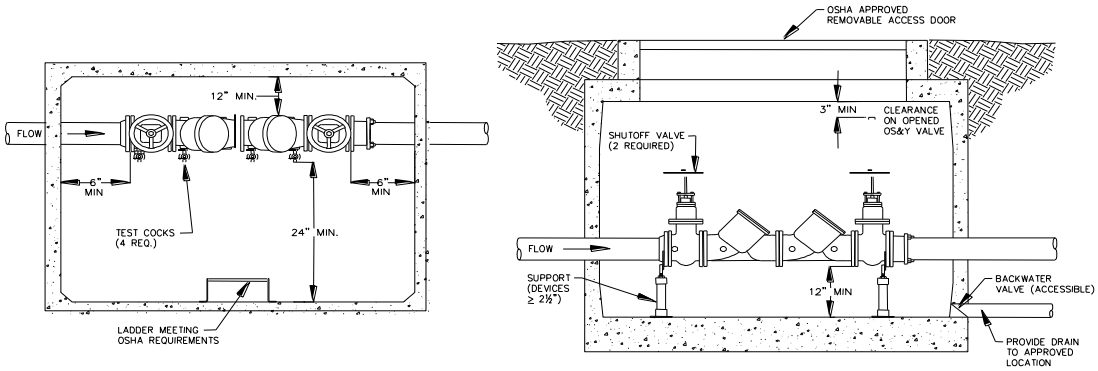

(a) Shall conform to bottom and side clearances when the assembly is installed inside a building;

(b) May be installed vertically as well as horizontally provided the assembly is specifically listed for that orientation in the Authority's Approved Backflow Prevention Assembly List.

(c) May be installed below grade in a vault, provided that water-tight fitted plugs or caps are installed in the test cocks, and the assembly shall not be subject to continuous immersion;

(d) Shall not be installed at a height greater than five feet unless there is a permanently installed platform meeting Oregon Occupational Safety and Health Administration (OR-OSHA) standards to facilitate servicing the assembly;

(e) May be installed with reduced clearances if the pipes are two inches in diameter or smaller, provided that they are accessible for testing and repairing, and approved by the appropriate local administrative authority having jurisdiction;

(f) Shall have adequate drainage provided except that the drain shall not be directly connected to a sanitary or storm water drain. Installers shall check with the water supplier and appropriate local administrative authority having jurisdiction for additional requirements;

(g) Shall be protected from freezing when necessary; and

(h) Be used to protect against non-health hazards under backsiphonage and backpressure conditions.

(9) A Pressure Vacuum Breaker Backsiphonage Prevention Assembly (PVB) or Spill-Resistant Pressure Vacuum Breaker Backsiphonage Prevention Assembly (SVB) shall:

Figure 3

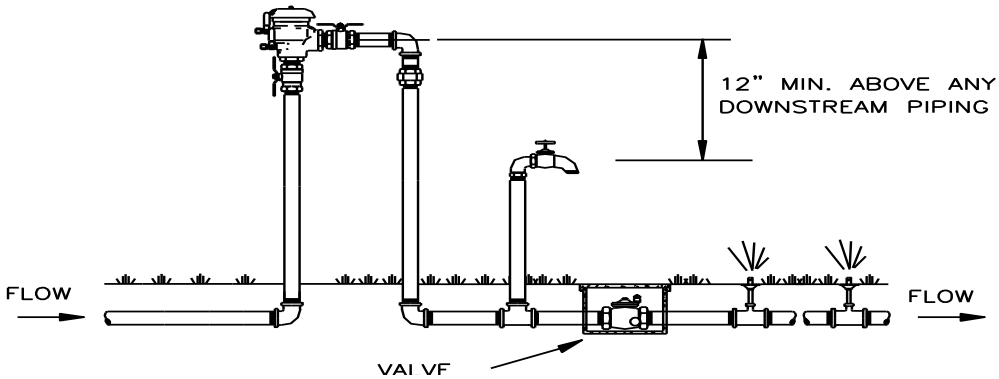

(a) Be installed where occasional water discharge from the assembly caused by pressure fluctuations will not be objectionable;

(b) Have adequate spacing available for maintenance and testing;

(c) Not be subject to flooding;

(d) Be installed a minimum of 12 inches above the highest downstream piping and outlets;

(e) Have absolutely no means of imposing backpressure by a pump or other means. The downstream side of the pressure vacuum breaker backsiphonage prevention assembly or spill-resistant pressure vacuum breaker backsiphonage prevention assembly may be maintained under pressure by a valve; and

(f) Be used to protect against backsiphonage only, not backpressure.

(10) An Atmospheric Vacuum Breaker (AVB) shall:

Figure 4

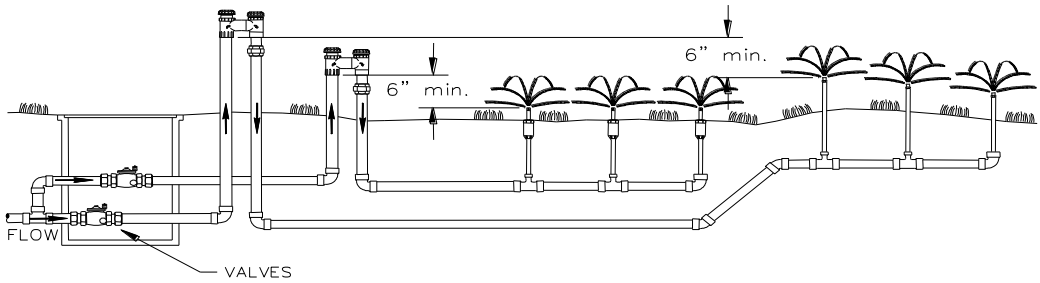

(a) Have absolutely no means of shut-off on the downstream or discharge side of the atmospheric vacuum breaker;
(b) Not be installed in dusty or corrosive atmospheres;
(c) Not be installed where subject to flooding;
(d) Be installed a minimum of six inches above the highest downstream piping and outlets;
(e) Be used intermittently;
(f) Have product and material approval under the Oregon Plumbing Specialty Code for non-testable devices.
(g) Not be pressurized for more than 12 hours in any 24-hour period; and
(h) Be used to protect against backsiphonage only, not backpressure.

Stat. Auth.: ORS 448.131
Stats. Implemented: ORS 448.131, 448.278

333-061-0072
Backflow Assembly Tester Certification

(1) In order to be certified as a backflow assembly tester, individuals must successfully complete all the requirements of this rule for testing backflow prevention assemblies. Only the following individuals may perform the field-testing on backflow prevention assemblies required by these rules:
   (a) Individuals certified by the Authority to test backflow prevention assemblies; and
   (b) Journeyman plumbers defined as those who hold a certificate of competency issued under ORS chapter 693 or apprentice plumbers, as defined under ORS 693.010.
(2) Journeyman plumbers or apprentice plumbers who test backflow prevention assemblies shall satisfactorily complete an Authority approved backflow assembly tester training course, according to rules adopted by the Director of Consumer and Business Services.
(3) Individuals certified as a backflow assembly tester must comply with ORS 448.279(2).
(4) All backflow assembly tester training courses must be approved by the Authority and taken at an Authority approved training facility.

(5) Satisfactory completion of an approved backflow assembly tester training course means:
  (a) Completing the course;
  (b) Scoring at least 70 percent on the written examination; and
  (c) Scoring at least 90 percent on the physical-performance examination.
(6) In order to apply for initial backflow assembly tester certification, individuals must submit:
  (a) A completed initial application with all required documentation as specified on the initial application form and in this rule, including but not limited to:
    (A) Proof of high school graduation, GED, associate's degree, bachelor's degree, master's degree, or PhD; and
    (B) Proof of satisfactory completion, as described in section (5) of this rule, of a backflow assembly tester initial training course within the 12 months prior to the Authority receiving the completed application; and
  (b) The initial certification fee as specified in section (9) of this rule.
(7) Backflow assembly tester certification expires on December 31 every two years based upon the first letter in the last name of the individual. Certification for individuals with names beginning in the letters A–K expire in even numbered years, and certification for individuals with names beginning in the letters L–Z expire in odd-numbered years. Certification renewal fees may be prorated if individuals are required to renew their certification prior to the end of the most recent two-year certification period.
  (a) Backflow assembly testers may only perform tests if they possess current, valid certification.
  (b) In order to apply to renew backflow assembly tester certification, individuals must submit:
    (A) A completed renewal application with all required documentation as specified on the renewal application form and in this rule, including but not limited to:
      (i) Proof of satisfactory completion, as described in section (5) of this rule, of either a backflow assembly tester renewal course or a backflow tester initial training course within the two year period prior to the expiration date of the certification; and
      (ii) Yearly test gauge accuracy verification or calibration reports performed in the same month every year, as determined by the backflow assembly tester; and
    (B) The certification renewal fee, as specified in section (9) of this rule.
  (c) The Authority may grant certification renewal without a reinstatement fee until January 31 in the year following the expiration date of the certification. A reinstatement fee as prescribed by section (9) of this rule is required in addition to the renewal fee for all renewal applications received after the

grace period ending on January 31 following the expiration date of the certification.

(d) Backflow assembly testers that fail to renew their certification for one year following the expiration date of their certification must meet the requirements established for applicants as prescribed by sections (6) or (8) of this rule as applicable.

(8) In order to apply for backflow assembly tester certification based on reciprocity, individuals must submit:

(a) A completed reciprocity application form with all required documentation as specified on the application form and in these rules, including but not limited to:

(A) Proof of current certification from a state or entity having substantially equivalent certification training and testing standards to those set forth in these rules, as determined by the Authority;

(B) Proof of satisfactory completion, as described in section (5) of this rule, of a backflow assembly tester initial training course or a backflow tester renewal course within the 12 months prior to the Authority receiving the completed application;

(C) Proof of high school graduation, GED, associate's degree, bachelor's degree, master's degree, or PhD; and

(D) Yearly test gauge accuracy verification or calibration reports performed in the same month every year, as determined by the backflow assembly tester; and

(b) The reciprocity review and initial certification fees as specified in section (9) of this rule.

(9) Fees related to backflow assembly tester certification.

(a) Payments shall be made to the Oregon Health Authority, Public Health Division.

(b) The Authority will not refund any fees once it has initiated processing an application.

(c) Fees are:

(A) Initial Certification (2-years) $195;

(B) Certification Renewal (2-years) $195;

(C) Reciprocity Review $35;

(D) Reinstatement $50; and

(E) Combination Certification Renewal (2-years) $305.

(d) Initial certification fees may be prorated to the nearest year for the remainder of the 2-year certification period.

(e) The Combination Certification Renewal fee applies when applicants simultaneously renew their backflow assembly tester and cross connection specialist certifications.

(10) Enforcement related to Backflow Assembly Tester certification

(a) The Authority may deny an initial application for certification, an application for renewal of certification, an application for certification based on reciprocity, or revoke a certification if the Authority determines the applicant/backflow assembly tester:
  (A) Provided false information to the Authority;
  (B) Did not possess certification issued by another state or entity because it was revoked;
  (C) Permitted another person to use their certificate number;
  (D) Failed to properly perform backflow prevention assembly testing;
  (E) Falsified a backflow assembly test report;
  (F) Failed to comply with ORS 448.279(2);
  (G) Failed to comply with these rules or other applicable federal, state or local laws or regulations; or
  (H) Performed backflow assembly tests with a gauge that was not calibrated for accuracy within the 12-month period prior to testing the assembly.

(b) Applicants or backflow assembly testers who have been denied initial, renewal, or reciprocity certification or whose certifications have been revoked have the right to appeal according to the provisions of chapter 183, Oregon Revised Statutes.

(c) Applicants or backflow assembly testers who have been denied initial, renewal, or reciprocity certification or whose certifications have been revoked, may not reapply for certification for one year from the date of denial or revocation of certification.

(d) Applicants or backflow assembly testers may petition the Authority prior to one year from the date of denial or revocation and may be allowed to reapply at an earlier date, at the discretion of the Authority.

(e) Backflow assembly tester test reports shall be made available to the Authority upon request.

Stat. Auth.: ORS 448.131, 448.279
Stats. Implemented: ORS 448.131, 448.278, 448.279

333-061-0073
Cross Connection Specialist Certification

(1) In order to be certified as a cross connection specialist, individuals must successfully complete all the applicable requirements of this rule. Only individuals certified by the Authority may administer cross connection control programs.

(2) Individuals certified as a cross connection specialist must comply with ORS 448.279(2).

(3) All training courses must be taken at an Authority approved training facility or be an Oregon Environmental Services Advisory Council approved course.

(4) Satisfactory completion of an approved cross connection specialist training course means:

(a) Completing the course; and
(b) Scoring at least 70 percent on the written examination.

(5) In order to apply for initial cross connection specialist certification, individuals must submit:
(a) A completed initial application with all required documentation as specified on the initial application form and in this rule, including but not limited to:
(A) Proof of high school graduation, GED, associate's degree, bachelor's degree, master's degree, or PhD; and
(B) Proof of satisfactory completion, as described in section (4) of this rule, of a cross connection specialist initial training course within the 12 months prior to the Authority receiving the completed application;
(C) Proof of one-year of experience working with public water systems as defined in OAR 333-061-0020 or plumbing as defined in ORS 447.010; and
(b) The initial certification fee as specified in section (8) of this rule.

(6) Cross connection specialist certification expires on December 31 every two years based upon the first letter in the last name of the individual. Certification for individuals with names beginning in the letters A-K expires in even numbered years, and certification for individuals with names beginning in the letters L-Z expires in odd numbered years Certification renewal fees may be prorated if individuals are required to renew their certification prior to the end of the most recent two-year certification period.
(a) In order to apply to renew cross connection specialist certification, individuals must submit:
(A) A completed renewal application with all required documentation as specified on the application form and in this rule, including but not limited to, proof of satisfactory completion of a total of at least 0.6 continuing education units from cross connection-related training courses or meetings taken within the two year period immediately prior to the date of the Authority receiving the completed application. Training courses and meetings must be attended at an Authority approved training facility or be approved by the Oregon Environmental Services Advisory Council; and
(B) The certification renewal fee, as specified in section (8) of this rule.
(b) The Authority may grant certification renewal without a reinstatement fee until January 31 in the year following the expiration date of the certification. A reinstatement fee as prescribed by section (8) of this rule is required in addition to the renewal fee for all renewal applications received after the grace period ending on January 31 following the expiration date of the certification.
(c) Cross connection specialists that fail to renew their certification for one year following the expiration date of their certification must meet the

requirements established for applicants as prescribed by sections (5) or (7) of this rule.

(7) In order to apply for cross connection specialist certification based on reciprocity, individuals must submit:

(a) A completed reciprocity application form with all required documentation as specified on the application form and in this rule, including but not limited to:

(A) Proof of current certification from a state or entity having substantially equivalent certification training and testing standards to those set forth in these rules, as determined by the Authority;

(B) Proof of satisfactory completion, as described in section (4) of this rule, of a cross connection specialist initial training course or cross connection specialist renewal course within the 12 months prior to the Authority receiving the completed application;

(C) Proof of high school graduation, GED, associate's degree, bachelor's degree, master's degree, or PhD; and

(b) The reciprocity application fee as specified in section (8) of this rule.

(8) Fees related to Cross Connection Specialist certification.

(a) Payments shall be made to the Oregon Health Authority, Public Health Division.

(b) The Authority will not refund any fees once it has initiated processing an application.

(c) Fees are:

(A) Initial Certification (2-years) $195;

(B) Certification Renewal (2-years) $195;

(C) Reciprocity Review $35;

(D) Reinstatement $50; and

(E) Combination Certification Renewal (2-years) $305.

(d) Initial certification fees may be prorated to the nearest year for the remainder of the 2-year certification period.

(e) The Combination Certification Renewal fee applies when applicants simultaneously renew their backflow assembly tester and cross connection specialist certifications.

(9) Enforcement related to cross connection specialist certification.

(a) The Authority may deny an initial application for certification, an application for renewal of certification, an application for certification based on reciprocity, or revoke a certification if the Authority determines the applicant/cross connection specialist:

(A) Provided false information to the Authority;

(B) Did not possess certification issued by another state or entity because it was revoked;

(C) Permitted another person to use their certificate number;

(D) Falsified a survey/inspection/Annual Summary Report;
(E) Failed to comply with ORS 448.279(2); or
(F) Failed to comply with these rules or other applicable federal, state or local laws or regulations.

(b) Applicants or cross connection specialists who have been denied initial, renewal, or reciprocity certification or who have had their certification revoked have the right to appeal according to the provisions of chapter 183, Oregon Revised Statutes.

(c) Applicants or cross connection specialists who have been denied initial, renewal, or reciprocity certification or who have had their certification revoked may not reapply for certification for one year from the date of denial or revocation of certification.

(d) Applicants or cross connection specialists may petition the Authority prior to one year from the date of denial or revocation and may be allowed to reapply at an earlier date, at the discretion of the Authority.

Stat. Auth.: ORS 448.131, 448.279
Stats. Implemented: ORS 448.131, 448.278, & 448.279

333-061-0074
Cross Connection Training Programs, Course, and Instructor Requirements

(1) In order to qualify as an Authority approved Cross Connection Specialist training program or facility or Backflow Assembly Tester training program or facility, the following requirements must be met:

(a) The training program must keep permanent records on attendance and performance of each student that enrolls in a course;

(b) The training program must submit the names of students who have successfully completed the training course to the Authority upon completion of the training course;

(c) The training schedule must be set in advance and the schedule must be submitted to the Authority quarterly for review and publication;

(d) The backflow training program must maintain a proper ratio of student-to-training equipment. A maximum ratio of three students for each backflow assembly test station is allowed for the Backflow Assembly Tester-training course;

(e) The training program must provide uniform training at all course locations;

(f) The training program shall provide the training materials necessary to complete the course. The training materials must be updated annually and submitted to the Authority for approval; and

(g) The training program must have the following minimum training equipment available for each course:

(A) Each test station for Backflow Assembly Tester initial training and certification renewal courses shall include:

(i) An operating pressure vacuum breaker backsiphonage prevention assembly, spill resistant pressure vacuum breaker backsiphonage prevention assembly, double check valve backflow prevention assembly, and a reduced pressure principle backflow prevention assembly, with appropriate test gauges for each assembly; and

(ii) A backflow prevention assembly failure simulator shall also be provided that is capable of simulating leaking check valves, shutoff valves, and relief valve failures.

(B) The training aids for the Backflow Assembly Tester training program or facility and Cross Connection Specialist training program or facility shall include the atmospheric vacuum breaker, pressure vacuum breaker backsiphonage prevention assembly, spill resistant pressure vacuum breaker backsiphonage prevention assembly, double check valve backflow prevention assembly, reduced pressure principle backflow prevention assembly, and a variety of test gauges.

(h) The training program must maintain uniform course curriculum according to sections (2), (3), (4) and (5) of this rule section, and maintain uniform instructor requirements according to section (6) of this rule section, subject to approval by the Authority.

(2) Requirements for the Cross Connection Specialist initial training course shall include:

(a) A minimum of 30 hours of training;

(b) The course content shall contain, but is not limited to, the following topics:

(A) Definitions, identification of cross connection hazards, and the hydraulics of backflow;

(B) Approved cross connection control methods, backflow prevention assembly specifications, and testing methods used for Authority-approved backflow prevention assemblies;

(C) Cross connection control requirements for public water systems, implementation of a cross connection control program, and writing a local cross connection control ordinance;

(D) Public education and record keeping requirements for an effective cross connection control program;

(E) Facility water use inspection techniques and hands on inspection of local facilities to identify actual or potential cross connections;

(F) Cross connection control program enforcement and managing a Backflow Assembly Tester program; and

(G) Review and discussion of Cross Connection Specialist safety issues.

(c) A minimum score of 85 percent is required to pass the Authority approved Cross Connection Specialist written examination.

(3) Requirements for the Backflow Assembly Tester initial training course shall include:
  (a) A minimum of 40 hours of training;
  (b) The course content shall contain, but is not limited to, the following topics:
    (A) Definitions, identification of cross connections, and the hydraulics of backflow;
    (B) Hazards associated with backflow pollution and contamination of potable water, approved cross connection control methods, and cross connection control program requirements for public water systems;
    (C) Backflow prevention assembly approval requirements, specifications and installation requirements for approved backflow prevention assemblies, and backflow prevention assembly repair techniques;
    (D) Complete disassembly and reassembly of each type of backflow prevention assembly;
    (E) Hands-on demonstration of the correct test procedures, troubleshooting for each type of backflow prevention assembly, and diagnosis of two failure and/or abnormal conditions during the hands-on backflow assembly test of each type of backflow prevention assembly;
    (F) Test gauge calibration and gauge accuracy verification methods; and
    (G) Review and discussion of Backflow Assembly Tester safety issues.
  (c) A minimum score of 75 percent is required to pass the Authority-approved Backflow Assembly Tester written examination; and
  (d) A minimum score of 90 percent is required to pass the Authority-approved Backflow Assembly Tester physical performance examination.
(4) Requirements for Cross Connection Specialist certification renewal shall include:
  (a) A minimum of 0.6 CEU of training;
  (b) The course content shall contain, but is not limited to, the following topics:
    (A) Review of cross connection control regulations OAR 333-061-0070 through 0073;
    (B) Review and discussion of recent backflow incidents and identification of cross connections; and
    (C) Review and discussion of Cross Connection Specialist safety issues.
(5) Requirements for Backflow Assembly Tester certification renewal shall include:
  (a) A minimum of 0.5 CEU of training, excluding examination time;
  (b) The course content shall contain, but is not limited to, the following topics:
    (A) Review of cross connection control regulations OAR 333-061-0070 through 0073;
    (B) Review of approved test procedures for backflow prevention assemblies;
    (C) Hands-on demonstration of the correct test procedures for each type of backflow prevention assembly;

(D) The correct student diagnosis and explanation of two failure and/or abnormal conditions during the hands-on backflow prevention assembly test of each type of backflow prevention assembly;

(E) Review and discussion of Backflow Assembly Tester safety issues; and

(F) Written examination that includes questions on cross connection control regulations OAR 333-061-0070 through 0073.

(c) A minimum score of 75 percent is required to pass the Authority approved Backflow Assembly Tester written examination; and

(d) A minimum score of 90 percent is required to pass the Authority approved Backflow Assembly Tester physical performance examination.

(6) Instructor qualification requirements shall include:

(a) To be eligible as an instructor for Cross Connection Specialist initial training or certification renewal course, the following experience in the cross connection control field is required:

(A) Must be currently certified as a Cross Connection Specialist in Oregon;

(B) Must have 2 years experience in enforcement of cross connection control requirements, or as a certified Cross Connection Specialist, or have related experience, subject to approval by the Authority;

(C) Must participate in two complete Cross Connection Specialist training courses as a student instructor assigned to teach a portion of the curriculum. A student instructor training program schedule must be submitted to the Authority for approval before training begins;

(D) Must receive a recommendation from the instructor of record for approval as an instructor. An unfavorable recommendation must be documented by supporting information and may be challenged by the trainee or by the Authority; and

(E) Must attend at least one instructor update meeting provided by the Authority each year.

(b) To be eligible as an instructor for the Backflow Assembly Tester initial training or certification renewal course, the following experience in the backflow prevention field is required:

(A) Must be currently certified as a Backflow Assembly Tester in Oregon;

(B) Must have 2 years experience as a certified Backflow Assembly Tester and experience installing, testing backflow prevention assemblies, or as a vocational instructor, or have related experience, subject to approval by the Authority;

(C) Must participate in two complete Backflow Assembly Tester training courses as a student instructor assigned to teach a portion of the text curriculum and the physical performance portion of the curriculum. A

student instructor training program schedule must be submitted to the Authority for approval before training begins;

(D) Must receive a recommendation from the instructor of record for approval as an instructor. An unfavorable recommendation must be documented by supporting information and may be challenged by the trainee or by the Authority; and

(E) Must attend at least one instructor update meeting provided by the Authority each year.

(c) The Authority shall maintain a list of qualified instructors.

Stat. Auth.: ORS 448.131
Stats. Implemented: ORS 431.110, 431.150, 448.131, 448.150, 448.268, 448.273, 448.278, 448.279

333-061-0075
Sanitary Surveys of Watersheds

(1) In water systems utilizing surface water sources or groundwater sources under the direct influence of surface water that do not provide filtration treatment, the water supplier shall conduct sanitary surveys of the watershed as deemed necessary by the water system to meet the requirements of OAR 333-061-0032(2)(b)(B). The results of the watershed survey will be reviewed by the Authority during the annual on-site inspection required by OAR 333-061-0032(2)(b)(C). The Authority recommends that systems which do provide filtration treatment for surface water sources or groundwater sources under the direct influence of surface water also conduct annual sanitary surveys of the watershed.

(2) The survey shall include but not be limited to, an evaluation of the following man-made and natural features in the watershed and their effect on water quality:

(a) Nature of and condition of dams, impoundments, intake facilities, diversion works, screens, disinfection equipment, perimeter fences, signs, gates;

(b) Nature of surface geology, character of soils, presence of slides, character of vegetation and forests, animal population, amounts of precipitation;

(c) Nature of human activities, extent of cultivated and grazing land, zoning restrictions, extent of human habitation, logging activities, method of sewage disposal, proximity of fecal contamination to intake, recreational activities and measures to control activities in the watershed;

(d) Nature of raw water, level of coliform organisms, vulnerability assessments of potential contaminants, algae, turbidity, color, mineral constituents, detention time in reservoir, time required for flow from sources of contamination to intake;

(e) Type and effectiveness of measures to control contamination, and algae, disinfection applications and residuals carried, monitoring practices, patrol of borders.

(3) A report on the findings of the survey shall be submitted annually to the Authority as required by OAR 333-061-0040(1).

(4) The Authority recommends using the guidelines in the US EPA Guidance Manual for Compliance with the Filtration and Disinfection Requirements for Public Water Systems Using Surface Water Sources to construct an effective watershed control management plan. A list of additional references recommended by the Authority is available upon request.

Stat. Auth.: ORS 448.131
Stats. Implemented: ORS 448.131, 448.150

333-061-0076
Sanitary Surveys

(1) All sanitary surveys as defined by OAR 333-061-0020(167) and this rule shall be conducted by the Authority.

(2) Every water system must undergo a sanitary survey at least every five years at a frequency determined by the Authority. Water suppliers must provide the Authority, upon request, any existing information that will enable the Authority to conduct the sanitary survey.

(3) The sanitary survey report shall be completed by staff and sent to the water system following the site visit. The content of the sanitary survey report shall address, at a minimum, the following components of a water system: source of supply; treatment; distribution system; finished water storage; pumps, pump facilities and controls; monitoring, reporting and data verification; system management and operations; and operator certification compliance.

(4) The sanitary survey report must identify any significant deficiency prescribed in this section, or any violation of drinking water regulations, discovered in the on-site visit. For the purposes of sanitary surveys, significant deficiencies for all water systems are:

(a) Surface Water Treatment:

(A) Incorrect location for compliance turbidity monitoring;

(B) For systems serving more than 3,300 people, no auto-dial, call-out alarm or auto-plant shutoff for low chlorine residual;

(C) For conventional or direct filtration, no auto-dial, call-out alarm or auto-plant shutoff for high turbidity when no operator is on-site;

(D) For conventional filtration, settled water turbidity not measured daily;

(E) For conventional or direct filtration, turbidity profile not conducted on individual filters at least quarterly;

(F) For cartridge filtration, no pressure gauges before and after cartridge filter;

(G) For cartridge filtration, filters not changed according to manufacturer’s recommended pressure differential; and

(H) For diatomaceous earth filtration, body feed not added with influent flow.

(b) Groundwater Well Construction:

(A) Sanitary seal and casing not watertight;

(B) Does not meet setbacks from hazards;
(C) Wellhead not protected from flooding;
(D) No raw water sample tap;
(E) No treated sample tap, if applicable; and
(F) If well vent exists, not screened.

(c) Groundwater Springbox Construction:
(A) Not constructed of impervious, durable material;
(B) No watertight access hatch/entry;
(C) No screened overflow;
(D) Does not meet setbacks from hazards;
(E) No raw water sample tap; and
(F) No treated sample tap, if applicable.

(d) Disinfection:
(A) No means to adequately determine flow rate on contact chamber effluent line;
(B) Failure to calculate CT values correctly; and
(C) No means to adequately determine disinfection contact time under peak flow and minimum storage conditions.

(e) Finished water storage:
(A) Hatch not locked;
(B) Roof and hatch not watertight;
(C) No flap-valve or equivalent over drain/overflow; and
(D) No screened vent.

(5) Sanitary survey fees. All water suppliers are subject to a fee payable to the Authority for sanitary surveys conducted according to this rule on or before the due date specified on the invoice sent to the water supplier.

(a) For community water systems, the sanitary survey fee is based upon either the number of connections or the population served.
(A) For community water systems with more than 250 service connections, the sanitary survey fee shall be based upon the number of connections served by the system.
(B) For community water systems with 250 service connections or less, but serving more than 1,000 people, the sanitary survey fee shall be based upon the population served by the system. For wholesale community water systems in this category, the sanitary survey fee will be assessed as a community water system without water treatment (WT) as specified in the table below.

(b) Transient non-community water systems identified as campgrounds with multiple handpumps will be considered one water system and assessed a single fee for the purposes of this rule.

(c) Late fees. A late fee will be assessed to any water system which fails to pay its sanitary survey fee within 10 days of the due date in the invoice sent to

the water system. The late fee may be waived at the discretion of the Authority. Fees for sanitary surveys are listed in Table 44 below:

Table 44

Water System Type	# of connections	Population	Fee	Late Fee
Non-community water system (transient, non-transient, or state regulated)	N/A	N/A	$450	$50
Community water system	15-250	25-1,000	$450	$50
Community water system without WT classification	251-500	1,001-2,000	$2,025	$100
	501-1,000	2,001-4,000	$2,700	$100
	1,001-3,000	4,001-12,000	$3,600	$150
	>3,000	>12,000	$5,400	$150
Community water system) with WT classification	251-500	1,001-2,000	$2,700	$100
	501-1,000	2,001-4,000	$3,600	$100
	1,001-3,000	4,001-12,000	$4,800	$150
	>3,000	>12,000	$7,200	$150
Community (purchasing exclusively)	251-500	1,001-2,000	$1,620	$100
	501-1,000	2,001-4,000	$2,160	$100
	1,001-3,000	4,001-12,000	$2,880	$150
	>3,000	>12,000	$4,320	$150

(6) Response required to address sanitary survey deficiencies:

(a) For water systems that use surface water sources or GWUDI sources, water suppliers must respond in writing to the Authority within 45 days of receiving the sanitary survey report.

(A) The response of the water system must include:

(i) The plan the water system will follow to resolve or correct the identified significant deficiencies;

(ii) The plan the water system will follow to resolve or correct any violations of drinking water regulations identified during the sanitary survey or at any other time; and

(iii) The schedule the water system will follow to execute the plan.

(B) The plans and schedules identified above in subparagraphs (6)(a)(A)(i) through (iii) of this rule must be approved by the Authority.

(b) For water systems that use only groundwater sources, water suppliers must consult with the Authority within 30 days of receiving written notice of a significant deficiency or a violation of a drinking water regulation identified during the sanitary survey. Within 120 days of receiving written notice of a significant deficiency or violation of a drinking water regulation, water suppliers must:

(A) Have corrected the significant deficiency or rule violation; or

(B) Be in compliance with an Authority approved corrective action plan.

(7) Public water systems that fail to respond to the Authority within the timeframe specified, are required to issue a tier 2 public notice as prescribed in OAR 333-061-0042(2)(b)(D).

(8) Public water systems must correct the deficiencies or violations identified in the sanitary survey according to the Authority-approved schedule identified in section (6) of this rule. Failure to do so constitutes a violation of these rules.

Stat. Auth.: ORS 448.131, 448.150

Stats. Implemented: ORS 448.131, 448.150

333-061-0077

Composite Correction Program & Comprehensive Performance Evaluations

(1) All Comprehensive Performance Evaluation Reports (CPEs) as defined by OAR 333-061-0020(36) and this rule shall be conducted by the Authority.

(2) Any public water system using surface water or groundwater under direct surface water influence which treats the water using conventional or direct filtration treatment is subject to the Composite Correction Program, including CPEs, as determined necessary or appropriate by the Authority.

(3) Any public water system using surface water or groundwater under direct surface water influence which treats the water using conventional or direct filtration treatment that has a measured filtered water turbidity level greater than 2.0 NTU from any individual filter in two consecutive measurements taken 15 minutes apart in each of two consecutive months as stated in OAR 333-061-0040(1)(d)(B)(ii)(IV) is required to have a CPE conducted on that public water system's water treatment facility.

(4) The CPE report shall be completed by staff and sent to the water system following the site visit. The content of the CPE report shall include, at a minimum, the following components: An assessment of the water treatment plant performance from current and historical water quality data, an evaluation of each major (treatment) unit process, an identification and prioritization of the water treatment plant performance limiting factors, and an assessment by the Authority if additional comprehensive technical assistance would be beneficial to the water system. The CPE results must be written into a report and submitted to the public water system by the Authority.

(5) The public water system receiving the CPE report must respond in writing to the Authority within 45 days (for systems serving at least 10,000 people) or 120 days

(for systems serving less than 10,000 people) of receiving the report as required by OAR 333-061-0040(1)(k). The response of the public water system must include:

(a) The plan the public water system will follow to resolve or correct the identified performance limiting factors that are within the water system's (and its governing body) ability to control; and

(b) The schedule the public water system will follow to execute the plan.

(6) The public water system must take corrective action through the CCP according to the schedule identified in subsection (5)(b) of this rule to resolve the performance limiting factors identified. Failure by the water system to take corrective action to resolve the performance limiting factors constitutes a violation of these rules.

Stat. Auth.: ORS 448.150
Stats. Implemented: ORS 448.131, 448.150

333-061-0078
Coliform Investigations

(1) A coliform investigation, as defined in OAR 333-061-0020(30), is an evaluation to identify the possible presence of sanitary defects, defects in distribution system coliform monitoring practices, and the likely reason that the coliform investigation was triggered at the public water system. Coliform investigations are separated into two levels as described in this section.

(a) A level 1 coliform investigation is conducted by the water supplier or a representative thereof. Minimum elements of the investigation include review and identification of atypical events that could affect distributed water quality or indicate that distributed water quality was impaired; changes in distribution system maintenance and operation that could affect distributed water quality (including water storage); source and treatment considerations that bear on distributed water quality, where appropriate (for example, whether a ground water system is disinfected); existing water quality monitoring data; and inadequacies in sample sites, sampling protocol, and sample processing.

(b) A level 2 coliform investigation is conducted by the Authority or a party approved by the Authority and is a more detailed and comprehensive examination of a water system (including the system's monitoring and operational practices) than a level 1 investigation. Minimum elements include those that are part of a level 1 investigation and additional review of available information, internal and external resources, and other relevant practices. Water suppliers must comply with any expedited actions or additional actions required by the Authority in the case of an exceedance of the MCL for *E. coli*.

(2) Coliform investigations must be conducted according to section (3) of this rule after a coliform investigation trigger identified in this section is exceeded at a water system.

(a) Level 1 coliform investigation triggers include, but are not limited to:

(A) Exceeding 5.0 percent total coliform-positive samples for the month at water systems where 40 or more samples per month are collected;

(B) Having two or more total coliform-positive samples in the same month at water systems where fewer than 40 samples per month are collected; or

(C) Failing to collect every required repeat sample after any single total coliform-positive sample.

(b) Level 2 coliform investigation triggers include, but are not limited to:

(A) An exceedance of the MCL for *E. coli* as specified in OAR 333-061-0030(4); or

(B) A second level 1 trigger as specified in subsection (2)(a) of this rule within a rolling 12-month period, unless the Authority has determined a likely cause for the total coliform-positive samples responsible for the first level 1 investigation trigger and established that the water supplier corrected the problem.

(c) The results of all routine and repeat samples collected according to OAR 333-061-0036(6)(b) through (g) not invalidated by the Authority must be used to determine whether a coliform investigation trigger as specified in this section has been exceeded.

(d) Special purpose samples, such as those collected to determine whether disinfection practices are sufficient following pipe placement, replacement, or repair, may not be used to determine whether a coliform investigation trigger has been exceeded.

(3) Water suppliers must ensure that coliform investigations are conducted in order to identify the possible presence of sanitary defects and defects in distribution system coliform monitoring practices.

(a) Water suppliers must ensure that investigators evaluate at least the minimum elements as specified in subsection (1)(a) or (1)(b) of this rule and must conduct the investigation consistent with any Authority directives that tailor specific investigation elements with respect to the size and type of the system and the size, type, and characteristics of the distribution system.

(b) Water suppliers must conduct level 1 coliform investigations consistent with Authority requirements if any of the investigation triggers specified in subsection (2)(a) of this rule are exceeded.

(A) The coliform investigation must be completed as soon as practical after exceeding the trigger, and must include a report summarizing the investigation.

(B) In the completed investigation report, water suppliers must describe sanitary defects detected, corrective actions completed, and a proposed timetable for any corrective actions not already completed. The investigation report may also note that no sanitary defects were identified.

(C) If the Authority reviews the completed coliform investigation report and determines that the investigation is not sufficient (including any proposed timetable for any corrective actions not already completed), the Authority will consult with the water supplier. If the Authority requires revisions after consultation, the water supplier must submit a revised investigation report to the Authority on an agreed-upon schedule not to exceed 30 days from the date of the consultation.

(c) Water suppliers must submit to and ensure a level 2 coliform investigation is conducted as soon as practical after a coliform investigation trigger specified in subsection (2)(b) of this rule is exceeded. Water suppliers must ensure a completed investigation report is submitted to the Authority as specified in OAR 333-061-0040(1)(l).

(A) Water suppliers must communicate with the Authority to ensure the investigation is completed within 30 days after learning that a coliform investigation trigger was exceeded.

(B) Completed investigation reports must describe sanitary defects detected, corrective actions completed, and a proposed timetable for any corrective actions not already completed. The investigation report may also note that no sanitary defects were identified.

(C) Water suppliers must comply with any expedited actions or additional actions required by the Authority in the case of an exceedance of the MCL for *E. coli*.

(D) If the Authority reviews a completed level 2 coliform investigation report and determines that the investigation is not sufficient (including any proposed timetable for any corrective actions not already completed), the Authority will consult with the water supplier. If the Authority requires revisions after consultation, the water supplier must ensure a revised investigation report is submitted to the Authority on an agreed-upon schedule not to exceed 30 days.

(d) Upon completion and submission of a level 1 or level 2 coliform investigation report, the Authority must determine if a likely cause for the level 1 trigger or level 2 trigger was identified and determine whether the water supplier corrected the problem, or agreed to a schedule acceptable to the Authority for correcting the problem.

(4) Water suppliers must correct sanitary defects discovered during level 1 or level 2 coliform investigations as soon as practical. For corrections not completed by the time an investigation report is submitted to the Authority, the water supplier must complete the corrective action(s) in compliance with a timetable approved by the Authority in consultation with the water supplier. The water supplier must notify the Authority when each scheduled corrective action is completed. At any time during the investigation or corrective action phase, either the water supplier or the Authority may request a consultation with the other party to determine the

appropriate actions to be taken. The water supplier may consult with the Authority regarding all relevant information that may impact its ability to comply with a requirement of this rule, including the method of accomplishment, an appropriate timeframe, and other relevant information.

(5) Failing to conduct the required coliform investigation after a trigger is exceeded or failure to complete corrective actions according to an Authority approved timetable is a violation of this rule.

Stat. Auth.: ORS 448.131
Stats. Implemented: ORS 448.131, 448.150

333-061-0080
Role of Counties

(1) Counties may develop water service plans to encourage small water systems to consolidate where possible.

(2) Prior to issuing building permits, the issuing agency must certify that the Authority has approved construction and installation plans for water system developments proposed after August 21, 1981. They must additionally certify that the water system development plan does not violate the water service plans for the city or county where the building permit will be issued.

(3) Counties or boundary commissions are authorized to approve the formation, dissolution, consolidation and expansion of water systems not owned by cities. In doing so, counties or boundary commissions should consider whether water service is extended in a logical fashion and whether water systems have a financial base sufficient for operation and maintenance.

(4) The Authority may delegate upon request any of its duties as set forth in these rules to counties. In doing so, the Authority shall require assurances that the county shall:

(a) Employ sufficient qualified personnel to perform the duties involved;

(b) Perform the duties involved continuously for the duration of the delegation;

(c) Report periodically on the nature and status of the activities being performed.

Stat. Auth.: ORS 448.131
Stats. Implemented: ORS 448.165, ORS 448.170

333-061-0085
Supplemental Fluoridation

(1) When fluoride compounds are added at public water systems for the prevention of dental caries, it shall be done in accordance with the following:

(a) The chemical feed apparatus shall be of a type specifically designed for metering fluoride compounds in proportion to the flow of water being treated. The apparatus shall possess an accuracy tolerance of no more than plus or minus five percent and shall be designed and installed in a manner

such that the injection of fluoride compounds is terminated when the water being treated ceases to flow;

(b) The specifications for the fluoride compounds shall conform with the most current AWWA standards as follows:

(A)	Sodium fluoride	AWWA B701
(B)	Sodium fluorosilicate	AWWA B702
(C)	Fluorosilicic acid	AWWA B703

(c) Respirators, replacement units and other safety equipment shall be stored in approved, dust-proof containers or cabinets when not in use.

(2) Prior to the application of fluoride compounds at public water systems, the water supplier shall submit to the Authority and receive approval for:

(a) Plans and specifications for the equipment with information on the testing instruments and protective devices for the operating personnel;

(b) Specifications of the fluoride compound to be used;

(c) Qualifications and training record of the person in responsible charge of the fluoridation operation;

(d) Current chemical analysis of the unfluoridated water.

(3) During operation of the fluoridation equipment, the operator shall:

(a) Not exceed 2.0 mg/l of fluoride in the finished water;

(b) Maintain all equipment in good working order;

(c) Make determinations of the fluoride content by approved methods on:

(A) The unfluoridated water as required by the Authority;

(B) The fluoridated water daily.

(d) Record daily the amount of fluoride added to the water, the quantity of water treated and the fluoride levels of the treated water. These records shall be submitted to the Authority monthly;

(e) Submit a split sample of the fluoridated water to the Authority for analysis as the Authority may require;

(f) Maintain and use safety equipment as required in this section.

Stat. Auth.: ORS 448.131
Stats. Implemented: ORS 431.110, 431.150, 448.131, 448.150 & 448.273

333-061-0087
Product Acceptability Criteria

(1) Any pipe, solder, or flux which is used in the installation or repair of:

(a) Any public water system, or

(b) Any plumbing in a residential or nonresidential facility providing water for human consumption shall be lead free. This subsection shall not apply to leaded joints necessary for the repair of cast iron pipes.

(2) Labeling of Solders. No solder containing more than 0.20 percent lead shall be sold in Oregon after July 1, 1985, unless said solder contains a warning label, prominently displayed, which states, "Contains Lead. Oregon Law prohibits the use of this solder in making up joints and fittings in any private or public potable

water supply system or any individual water user's line". Solder to be used in making up joints and fittings in any private or public potable water supply system or any individual water user's line shall meet **ASTM Specification B32-76**.

(3) Plumbing piping shall not be used for electrical grounding in any new construction.

(4) Use of lead pipe prohibited. No lead pipe shall be used in any potable water system. Persons who own or operate a public water system shall submit a compliance schedule, acceptable to the Authority, for the identification and removal of all lead service pipes or they shall certify to the Authority that no lead service piping exists in the system. The compliance schedule or the certification shall be submitted for approval by July 1, 1985.

(5) Materials and products which come into contact with drinking water supplied by public water systems or which come into contact with drinking water treatment chemicals used by public water systems shall meet the requirements of **NSF Standard 61 Drinking Water System Components - Health Effects (Revised October 1988**) or equivalent. These materials and products include but are not limited to process media, protective materials, joining and sealing materials, pipes and related products, and mechanical devices used in treatment, transmission, and distribution systems.

(6) Products added to public water systems for treatment, purposes including but not limited to disinfection, oxidation, filtration, scale control, corrosion control, pH adjustment, softening, precipitation, sequestering, fluoridation, coagulation, flocculation, and water well treatment shall meet the requirements of **NSF Standard 60 - Drinking Water Treatment Chemicals - Health Effects (Revised October 1988**) or equivalent.

(7) Point-of-use reverse osmosis drinking water treatment systems and materials and components used in these systems designed to be used for the reduction of specific contaminants from public water supplies shall meet the requirements of **NSF Standard 58 - Reverse Osmosis Drinking Water Treatment Systems** - or equivalent.

(8) Point-of-use and point-of-entry drinking water treatment units, other than reverse osmosis units, designed to be used for the reduction of specific contaminants from public water supplies shall meet the requirements of **NSF Standards 53 - Drinking Water Treatment Units -Health Effects** - or equivalent.

Stat. Auth.: ORS 448.131
Stats. Implemented: ORS 448.115, 448.131

333-061-0090
Penalties

(1) Violation of these rules shall be punishable as set forth in ORS 448.990 which stipulates that violation of any section of these rules is a Class A misdemeanor.

(2) Pursuant to ORS 448.280, 448.285 and 448.290, any person who violates these rules shall be subject to a civil penalty. Each and every violation is a separate and distinct offense, and each day's violation is a separate and distinct violation.

(3) The civil penalty for the following violations shall not exceed $1,000 per day for each violation:
   (a) Failure to obtain approval of plans prior to the construction of water system facilities;
   (b) Failure to construct water system facilities in compliance with approved plans;
   (c) Failure to take immediate action to correct maximum contaminant level violations;
   (d) Failure to comply with sampling and analytical requirements;
   (e) Failure to comply with reporting and public notification requirements;
   (f) Failure to meet the conditions of a compliance schedule developed under a variance or permit;
   (g) Failure to comply with cross connection control requirements;
   (h) Failure to comply with the operation and maintenance requirements;
   (i) Failure to comply with an order issued by the Authority; and
   (j) Failure to utilize an operator in direct responsible charge of a water system.

(4) Civil penalties shall be based on the population served by public water systems and shall be in accordance with Table 45 below:

Table 45

Population Served	Civil Penalty
10 to 100	$ 50/day
101 to 300	$ 100/day
301 to 1,500	$ 250/day
1,501 to 10,000	$ 500/day
Over 10,000	$ 1,000/day

Stat. Auth.: ORS 448.131
Stats. Implemented: ORS 448.131, 448.280, 448.285, 448.290, & 448.990

333-061-0095
Severability
These rules are severable, if any rule or part thereof or the application of such rule to any person or circumstance is declared invalid, that invalidity shall not affect the validity of any remaining portion of these rules.
Stat. Auth.: ORS 448.131
Stats. Implemented: ORS 448.131

333-061-0097
Adverse Health Effects Language
When providing the information on potential adverse health effects required by these rules in notices of violations of maximum contaminant levels, maximum residual disinfectant levels, treatment technique requirements, or notices of the granting or the

continued existence of variances or permits, or notices of failure to comply with a variance or permit schedule, the owner or operator of a public water system shall include the language specified below for each contaminant.

(1) Adverse Health Effects for Organic Chemicals:

(a) Volatile Organic Chemicals (VOCs):

(A) **Benzene.** Some people who drink water containing benzene in excess of the MCL over many years could experience anemia or a decrease in blood platelets, and may have an increased risk of getting cancer.

(B) **Carbon tetrachloride.** Some people who drink water containing carbon tetrachloride in excess of the MCL over many years could experience problems with their liver and may have an increased risk of getting cancer.

(C) **Chlorobenzene.** Some people who drink water containing chlorobenzene in excess of the MCL over many years could experience problems with their liver or kidneys.

(D) ***o*-Dichlorobenzene.** Some people who drink water containing *o*-dichlorobenzene well in excess of the MCL over many years could experience problems with their liver, kidneys, or circulatory systems.

(E) ***p*-Dichlorobenzene.** Some people who drink water containing *p*-dichlorobenzene in excess of the MCL over many years could experience anemia, damage to their liver, kidneys, or spleen, or changes in their blood.

(F) **1,2-Dichloroethane.** Some people who drink water containing 1,2-dichloroethane in excess of the MCL over many years may have an increased risk of getting cancer.

(G) **1,1-Dichloroethylene.** Some people who drink water containing 1,1-dichloroethylene in excess of the MCL over many years could experience problems with their liver.

(H) ***cis*-1,2-Dichloroethylene.** Some people who drink water containing *cis*-1,2-dichloroethylene in excess of the MCL over many years could experience problems with their liver.

(I) ***trans*-1,2-Dichloroethylene.** Some people who drink water containing *trans*-1,2- dichloroethylene well in excess of the MCL over many years could experience problems with their liver.

(J) **Dichloromethane(methylene chloride).** Some people who drink water containing dichloromethane in excess of the MCL over many years could have liver problems and may have an increased risk of getting cancer.

(K) **1,2-Dichloropropane.** Some people who drink water containing 1,2-dichloropropane in excess of the MCL over many years may have an increased risk of getting cancer.

(L) **Ethylbenzene.** Some people who drink water containing ethylbenzene well in excess of the MCL over many years could experience problems with their liver or kidneys.

(M) **Styrene.** Some people who drink water containing styrene well in excess of the MCL over many years could have problems with their liver, kidneys, or circulatory system.

(N) **Tetrachloroethylene(PCE).** Some people who drink water containing tetrachloroethylene in excess of the MCL over many years could have problems with their liver, and may have an increased risk of getting cancer.

(O) **1,2,4-trichlorobenzene.** Some people who drink water containing 1,2,4-trichlorobenzene well in excess of the MCL over many years could experience changes in their adrenal glands.

(P) **1,1,1-Trichloroethane.** Some people who drink water containing 1,1,1- trichloroethane in excess of the MCL over many years could experience problems with their liver, nervous system, or circulatory system.

(Q) **1,1,2-Trichloroethane**. Some people who drink water containing 1,1,2-trichloroethane well in excess of the MCL over many years could have problems with their liver, kidneys, or immune systems.

(R) **Trichloroethylene.** Some people who drink water containing trichloroethylene in excess of the MCL over many years could experience problems with their liver and may have an increased risk of getting cancer.

(S) **Toluene**. Some people who drink water containing toluene well in excess of the MCL over many years could have problems with their nervous system, kidneys, or liver.

(T) **Vinyl chloride**. Some people who drink water containing vinyl chloride in excess of the MCL over many years may have an increased risk of getting cancer.

(U) **Xylenes**. Some people who drink water containing xylenes in excess of the MCL over many years could experience damage to their nervous system.

(b) Synthetic Organic Chemicals (SOCs):

(A) **2,4-D.** Some people who drink water containing the weed killer 2,4-D well in excess of the MCL over many years could experience problems with their kidneys, liver, or adrenal glands.

(B) **2,4,5-TP(Silvex).** Some people who drink water containing 2,4,5-TP in excess of the MCL over many years could experience liver problems.

(C) **Alachlor.** Some people who drink water containing alachlor in excess of the MCL over many years could have problems with their eyes,

liver, kidneys, or spleen, or experience anemia, and may have an increased risk of getting cancer.

(D) **Atrazine.** Some people who drink water containing atrazine well in excess of the MCL over many years could experience problems with their cardiovascular system or reproductive difficulties.

(E) **Benzo(a)pyrene.** Some people who drink water containing benzo(a)pyrene in excess of the MCL over many years may experience reproductive difficulties and may have an increased risk of getting cancer.

(F) **Carbofuran.** Some people who drink water containing carbofuran in excess of the MCL over many years could experience problems with their blood, or nervous or reproductive systems.

(G) **Chlordane.** Some people who drink water containing chlordane in excess of the MCL over many years could experience problems with their liver or nervous system, and may have an increased risk of getting cancer.

(H) **Dalapon.** Some people who drink water containing dalapon well in excess of the MCL over many years could experience minor kidney changes.

(I) **Di(2-ethylhexyl)adipate.** Some people who drink water containing di(2-ethylhexyl)adipate well in excess of the MCL over many years could experience toxic effects such as weight loss, liver enlargement or possible reproductive difficulties.

(J) **Di(2-ethylhexyl)phthalate.** Some people who drink water containing di(2-ethylhexyl)phthalate well in excess of the MCL over many years may have problems with their liver or experience reproductive difficulties, and may have an increased risk of getting cancer.

(K) **Dibromochloropropane (DBCP).** Some people who drink water containing DBCP in excess of the MCL over many years could experience reproductive difficulties and may have an increased risk of getting cancer.

(L) **Dinoseb.** Some people who drink water containing dinoseb well in excess of the MCL over many years could experience reproductive difficulties.

(M) **Diquat.** Some people who drink water containing diquat in excess of the MCL over many years could get cataracts.

(N) **Dioxin (2,3,7,8-TCDD).** Some people who drink water containing dioxin in excess of the MCL over many years could experience reproductive difficulties and may have an increased risk of getting cancer.

(O) **Endothall.** Some people who drink water containing endothall in excess of the MCL over many years could experience problems with their stomach or intestines.

(P) **Endrin.** Some people who drink water containing endrin in excess of the MCL over many years could experience liver problems.

(Q) **Ethylene dibromide (EDB).** Some people who drink water containing ethylene dibromide in excess of the MCL over many years could experience problems with their liver, stomach, reproductive system, or kidneys, and may have an increased risk of getting cancer.

(R) **Glyphosate.** Some people who drink water containing glyphosate in excess of the MCL over many years could experience problems with their kidneys or reproductive difficulties.

(S) **Heptachlor.** Some people who drink water containing heptachlor in excess of the MCL over many years could experience liver damage and may have an increased risk of getting cancer.

(T) **Heptachlor epoxide.** Some people who drink water containing heptachlor epoxide in excess of the MCL over many years could experience liver damage and may have an increased risk of getting cancer.

(U) **Hexachlorobenzene.** Some people who drink water containing hexachlorobenzene in excess of the MCL over many years could experience problems with their liver or kidneys or adverse reproductive effects, and may have an increased risk of getting cancer.

(V) **Hexachlorocyclopentadiene.** Some people who drink water containing hexachlorocyclopentadiene well in excess of the MCL over many years could experience problems with their kidneys or stomach.

(W) **Lindane.** Some people who drink water containing lindane in excess of the MCL over many years could experience problems with their kidneys or liver.

(X) **Methoxychlor.** Some people who drink water containing methoxychlor in excess of the MCL over many years could experience reproductive difficulties.

(Y) **Oxamyl.** Some people who drink water containing oxamyl in excess of the MCL over many years could experience slight nervous system effects.

(Z) **Polychlorinated biphenyls (PCBs).** Some people who drink water containing polychlorinated biphenyls in excess of the MCL over many years could experience changes in their skin, problems with their thymus gland, immune deficiencies or reproductive or nervous system difficulties, and may have an increased risk of getting cancer.

(AA) **Pentachlorophenol.** Some people who drink water containing pentachlorophenol in excess of the MCL over many years could

experience problems with their liver or kidneys, and may have an increased risk of getting cancer.

(BB) **Picloram.** Some people who drink water containing picloram in excess of the MCL over many years could experience problems with their liver.

(CC) **Simazine.** Some people who drink water containing simazine in excess of the MCL over many years could experience problems with their blood.

(DD) **Toxaphene.** Some people who drink water containing toxaphene in excess of the MCL over many years could have problems with their kidneys, liver, or thyroid, and may have an increased risk of getting cancer.

(2) Special Notice for Lead and Copper.

(a) Mandatory health effects information. When providing the information in public notices on the potential adverse health effects of lead in drinking water, the owner or operator of the water system shall include the following specific language in the notice:

"Infants and children who drink water containing lead in excess of the action level could experience delays in their physical or mental development. Children could show slight deficits in attention span and learning abilities. Adults who drink this water over many years could develop kidney problems or high blood pressure."

(b) Mandatory health effects information. When providing information on the potential adverse health effects of copper in drinking water, the owner or operator of the water system shall include the following specific language in the notice:

"Copper is an essential nutrient, but some people who drink water containing copper in excess of the action level over a relatively short amount of time could experience gastrointestinal distress. Some people who drink water containing copper in excess of the action level over many years could suffer liver or kidney damage. People with Wilson's Disease should consult their personal doctor."

(3) Inorganics -- public notice language.

(a) **Antimony.** Some people who drink water containing antimony well in excess of the MCL over many years could experience increases in blood cholesterol and decreases in blood sugar.

(b) **Arsenic.** Some people who drink water containing arsenic in excess of the MCL over many years could experience skin damage or problems with their circulatory system, and may have an increased risk of getting cancer.

(c) **Asbestos.** Some people who drink water containing asbestos in excess of the MCL over many years may have an increased risk of developing benign intestinal polyps.

(d) **Barium.** Some people who drink water containing barium in excess of the MCL over many years could experience an increase in their blood pressure.

(e) **Beryllium.** Some people who drink water containing beryllium well in excess of the MCL over many years could develop intestinal lesions.

(f) **Cadmium.** Some people who drink water containing cadmium in excess of the MCL over many years could experience kidney damage.

(g) **Chromium.** Some people who use water containing chromium well in excess of the MCL over many years could experience allergic dermatitis.

(h) **Cyanide.** Some people who drink water containing cyanide well in excess of the MCL over many years could experience nerve damage or problems with their thyroid.

(i) **Fluoride.** Some people who drink water containing fluoride in excess of the MCL (4.0 mg/l) over many years could get bone disease, including pain and tenderness of the bones. Fluoride in drinking water at half the MCL (2.0mg/l) or more may cause mottling of children's teeth, usually in children less than nine years old. Mottling, also known as dental fluorosis, may include brown staining or pitting of the teeth, and occurs only in developing teeth before they erupt from the gums.

(j) **Mercury.** Some people who drink water containing inorganic mercury well in excess of the MCL over many years could experience kidney damage.

(k) **Nitrate (as nitrogen).** Infants below the age of 6 months who drink water containing nitrate in excess of the MCL could become seriously ill and, if untreated, may die. Symptoms include shortness of breath and blue baby syndrome.

(l) **Nitrite.** Infants below the age of 6 months who drink water containing nitrite in excess of the MCL could become seriously ill and, if untreated, may die. Symptoms include shortness of breath and blue baby syndrome.

(m) **Total Nitrate and Nitrite.** Infants below the age of 6 months who drink water containing nitrate and nitrite in excess of the MCL could become seriously ill and, if untreated, may die. Symptoms include shortness of breath and blue baby syndrome.

(n) **Selenium.** Selenium is an essential nutrient. However, some people who drink water containing selenium in excess of the MCL over many years could experience hair or fingernail losses, numbness in fingers or toes, or problems with their circulation.

(o) **Thallium.** Some people who drink water containing thallium in excess of the MCL over many years could experience hair loss, changes in their blood, or problems with their kidneys, intestines, or liver.

(4) Microbiological contaminants

(a) When providing information in public notices required under OAR 333-061-0042(2)(b) for exceeding the MCL for total coliform bacteria as specified in

40 CFR 141.63, the water supplier must include the following specific language in the notice:

"Coliforms are bacteria that are naturally present in the environment and are used as an indicator that other, potentially harmful, bacteria may be present. Coliforms were found in more samples than allowed and this was a warning of potential problems."

(b) When providing information in public notices for an exceedance of the MCL for *E. coli* bacteria as prescribed by OAR 333-061-0030(4), the language within quotation marks must be included, exactly as written:

"*E. coli* are bacteria whose presence indicates that the water may be contaminated with human or animal wastes. Human pathogens in these wastes can cause short-term effects, such as diarrhea, cramps, nausea, headaches, or other symptoms. They may pose a greater health risk for infants, young children, the elderly, and people with severely compromised immune systems."

(c) When providing information in public notices for failing to complete a coliform investigation or corrective action as required by OAR 333-061-0078, the language specified in paragraphs (4)(c)(A) or (4)(c)(B) must be included, exactly as written except for the language within brackets. The language in paragraph (4)(c)(A) must be used when total coliform was detected at a water system and the language in (4)(c)(B) must be used when *E. coli* was detected regardless of whether the MCL for *E. coli* was exceeded.

(A) Coliforms are bacteria that are naturally present in the environment and are used as an indicator that other, potentially harmful, waterborne pathogens may be present or that a potential pathway exists through which contamination may enter the drinking water distribution system. We found coliforms indicating the need to look for potential problems in water treatment or distribution. When this occurs, we are required to conduct investigations to identify problems and to correct any problems that are found.

[THE WATER SUPPLIER MUST USE THE FOLLOWING APPLICABLE SENTENCES.]

We failed to conduct the required coliform investigation.

We failed to correct all identified sanitary defects that were found during the coliform investigation(s).

(B) *E. coli* are bacteria whose presence indicates that the water may be contaminated with human or animal wastes. Human pathogens in these wastes can cause short-term effects, such as diarrhea, cramps, nausea, headaches, or other symptoms. They may pose a greater health risk for infants, young children, the

elderly, and people with severely compromised immune systems. We violated the standard for *E. coli*, indicating the need to look for potential problems in water treatment or distribution. When this occurs, we are required to conduct a detailed investigation to identify problems and to correct any problems that are found. [THE WATER SUPPLIER MUST USE THE FOLLOWING APPLICABLE SENTENCES.]
We failed to conduct the required coliform investigation.
We failed to correct all identified sanitary defects that were found during the coliform investigation that we conducted.

(d) When providing information in public notices for failing to complete an Authority approved start-up procedure at a seasonal water system, the water supplier must include specific information about the situation as prescribed by OAR 333-061-0042(4)(a). Additionally, if monitoring was required as part of the Authority approved start-up procedure the following language in quotation marks must be included, exactly as written except for the language in brackets where water system specific information must be included: "We are required to monitor your drinking water for specific contaminants on a regular basis. Results of regular monitoring are an indicator of whether or not your drinking water meets health standards. During [compliance period], we did not complete [any or all] required monitoring or testing for coliform bacteria, and therefore cannot be sure of the quality of your drinking water during that time."

(e) **Turbidity**. Turbidity has no health effects. However, turbidity can interfere with disinfection and provide a medium for microbial growth. Turbidity may indicate the presence of disease-causing organisms. These organisms include, bacteria, viruses, and parasites that can cause symptoms such as nausea, cramps, diarrhea and associated headaches.

(5) Treatment Techniques -- Public Notice Language.

(a) **Acrylamide.** Some people who drink water containing high levels of acrylamide over a long period of time could have problems with their nervous system or blood, and may have an increased risk of getting cancer.

(b) **Epichlorohydrin.** Some people who drink water containing high levels of epichlorohydrin over a long period of time could experience stomach problems, and may have an increased risk of getting cancer.

(c) **Surface Water Treatment Rule (*Giardia*, viruses, heterotrophic plate count bacteria, *Legionella*), Interim Enhanced Surface Water Treatment Rule (*Giardia*, viruses, heterotrophic plate count bacteria, *Legionella* and *Cryptosporidium*), Long Term 1 Enhanced Surface Water Treatment Rule (*Giardia*, viruses, heterotrophic plate count bacteria, *Legionella* and *Cryptosporidium*) and Filter Backwash Recycling Rule (*Cryptosporidium*).** Inadequately treated water may contain

disease-causing organisms. These organisms include bacteria, viruses, and parasites which can cause symptoms such as nausea, cramps, diarrhea, and associated headaches.

(d) **Groundwater.** Inadequately treated or inadequately protected water may contain disease-causing organisms. These organisms can cause symptoms such as diarrhea, nausea, cramps, and associated headaches.

(e) Use of an emergency groundwater source that has been identified as potentially groundwater under direct influence of surface water, but has not been fully evaluated. This type of source may not be treated sufficiently to inactivate pathogens such as *Giardia lamblia* and *Cryptosporidium.*

(6) Disinfectant and Disinfection Byproducts -- Special Adverse Health Effects Language.

(a) **Total Trihalomethanes (TTHMs).** Some people who drink water containing trihalomethanes in excess of the MCL over many years may experience problems with their liver, kidneys, or central nervous system, and may have an increased risk of getting cancer.

(b) **Haloacetic Acids (HAA).** Some people who drink water containing haloacetic acids in excess of the MCL over many years may have an increased risk of getting cancer.

(c) **Chlorine.** Some people who use water containing chlorine well in excess of the MRDL could experience irritating effects to their eyes and nose. Some people who drink water containing chlorine well in excess of the MRDL could experience stomach discomfort.

(d) **Chloramines.** Some people who use water containing chloramines well in excess of the MRDL could experience irritating effects to their eyes and nose. Some people who drink water containing chloramines well in excess of the MRDL could experience stomach discomfort or anemia.

(e) **Chlorine dioxide.** (where any 2 consecutive daily samples taken at the entrance to the distribution system are above the MRDL). Some infants and young children who drink water containing chlorine dioxide in excess of the MRDL could experience nervous system effects. Similar effects may occur in fetuses of pregnant women who drink water containing chlorine dioxide in excess of the MRDL. Some people may experience anemia.

NOTE: In addition to the language in this introductory text of subsection (6)(e) of this rule, water systems must include either the language in paragraphs (6)(e)(A) or (6)(e)(B) of this rule. Water systems with a violation at the treatment plant, but not in the distribution system, are required to use the language in paragraph (6)(e)(A) of this rule and treat the violation as a non-acute violation. Water systems with a violation in the distribution system are required to use the language in paragraph (6)(e)(B) of this rule and treat the violation as an acute violation.

(A) The chlorine dioxide violations reported today are the result of exceedances at the treatment facility only, and do not include violations within the distribution system serving users of this water supply. Continued compliance with chlorine dioxide levels within the distribution system minimizes the potential risk of these violations to present consumers.

(B) The chlorine dioxide violations reported today include exceedances of the EPA standard within the distribution system serving water users. Violations of the chlorine dioxide standard within the distribution system may harm human health based on short-term exposures. Certain groups, including fetuses, infants, and young children, may be especially susceptible to nervous system effects of excessive exposure to chlorine dioxide-treated water. The purpose of this notice is to advise that such persons should consider reducing their risk of adverse effects from these chlorine dioxide violations by seeking alternate sources of water for human consumption until such exceedances are rectified. Local and State health authorities are the best sources for information concerning alternate drinking water.

(f) **Bromate.** Some people who drink water containing bromate in excess of the MCL over many years may have an increased risk of getting cancer.

(g) **Chlorite.** Some infants and young children who drink water containing chlorite in excess of the MCL could experience nervous system effects. Similar effects may occur in fetuses of pregnant women who drink water containing chlorite in excess of the MCL. Some people may experience anemia.

(h) **Total Organic Carbon (TOC).** Total Organic Carbon (TOC) has no health effects. However, TOC provides a medium for the formation of disinfection byproducts (DBPs). These byproducts include trihalomethanes and haloacetic acids. Drinking water containing these byproducts in excess of the MCL may lead to adverse health effects, liver or kidney problems, or nervous system effects, and may lead to an increased risk of getting cancer.

(7) Adverse health effects for radionuclides:

(a) **Beta/photon emitters.** Certain minerals are radioactive and may emit forms of radiation known as photons and beta radiation. Some people who drink water containing beta and photon emitters in excess of the MCL over many years may have an increased risk of getting cancer.

(b) **Alpha emitters.** Certain minerals are radioactive and may emit a form of radiation known as alpha radiation. Some people who drink water containing alpha emitters in excess of the MCL over many years may have an increased risk of getting cancer.

(c) **Combined Radium-226/228.** Some people who drink water containing radium-226 or -228 in excess of the MCL over many years may have an increased risk of getting cancer.

(d) **Uranium.** Some people who drink water containing uranium in excess of the MCL over many years may have an increased risk of getting cancer and kidney toxicity.

Stat. Auth.: ORS 448.131
Stats. Implemented: ORS 448.131. 448.150

333-061-0098
References

All standards, listings and publications referred to in these rules are by those references made a part of these rules as though fully set forth. Copies are available from the Oregon Health Authority, Public Health Division.

(1) **American Society for testing and materials (ASTM) specification B32-83 (solder)**
(2) **American Water Works Association (AWWA) Standards**
(3) **Clean Water Act (EPA)**
(4) **Code of Federal Regulations (40 CFR: 141.21-.25, 141.30 - Inorganics, etc.)**
(5) **Code of Federal Regulations (21 CFR: 103, 110 and 129 - Bottled water)**
(6) **Federal Insecticide, Fungicide and Rodenticide ACT (FIFRA-EPA)**
(7) **Manual of Cross Connection Control, USC 10th Edition, October 2009**
(8) **National Bureau of Standards (NBS) Handbook 69, - Maximum Permissible Body Burdens and Maximum Permissible Concentrations of Radionuclides in Air and Water for Occupational Exposure**
(9) **National Primary Drinking Water Regulations (40 CFR 141 and 142)**
(10) **NSF Standard 53 - Drinking Water Treatment Units - Health Effects**
(11) **NSF Standard 58 - Reverse Osmosis Drinking Water Treatment Systems**
(12) **NSF Standard 60 - Drinking Water Treatment Chemicals -Health Effects**
(13) **NSF Standard 61, Section 9 - Drinking Water System Components - Health Effects**
(14) **National Secondary Drinking Water Regulations (40 CFR 143)**
(15) **Oregon Administrative Rules Chapter 437 (Oregon OSHA)**
(16) **Oregon Administrative Rules Chapter 660, Division 011(Public Facilities Planning)**
(17) **Oregon Administrative Rules Chapter 660, Division 031(Land Conservation & Development)**
(18) **Oregon Administrative Rules Chapter 690, Divisions 200 through 220 (General standards for the construction and maintenance of water wells in Oregon, Water Resources Department**)
(19) **Oregon Revised Statutes 197 (Land Conservation & Development)**
(20) **Oregon Revised Statutes 215 and 227 (Land Use Planning)**
(21) **Oregon Revised Statutes 448 (Public Water Systems)**

(22) **Oregon Revised Statutes 468.700 to 468.990 (DEQ)**
(23) **Oregon Revised Statutes 527.610 to 527.990 (Dept. of Forestry)**
(24) **Oregon Revised Statutes 536.220 to 536.360 (Water Resources)**
(25) **Oregon Revised Statutes 634.992 (Dept. of Agriculture)**
(26) **Oregon State Plumbing Code**
(27) **Standard Methods for the Examination of Water and Wastewater, 22nd Edition, 2012.**
(28) **Supplement to the 19th Edition of Standard Methods for the Examination of Water and Wastewater, 1996.**

Stat. Auth.: ORS 448.131
Stats. Implemented: ORS 431.110, 431.150, 448.131, 448.150, 448.273 & 448.279

Operator Certification Program

333-061-0210
Scope

OAR 333-061-0210 through OAR 333-061-0272 apply to community and non-transient non-community public water systems, water suppliers responsible for these types of water systems, and the operators of water treatment plants and distribution systems at community and non-transient non-community public water systems.

Stat. Auth.: ORS 448.131
Stats. Implemented: ORS 448.450, 448.455, 448.460, 448.465 & 448.994

333-061-0220
Classification of Water Treatment Plants and Water Distribution Systems

Water treatment plants and distribution systems at community and non-transient non-community public water systems are classified based on the size and complexity of the water system facility. Classification of a water system or water system facility determines the level of certification required for operators in direct responsible charge of a water system or water system facility as prescribed by OAR 333-061-0225.

(1) Small water system classification applies when a water system serves 150 service connections or less and:
    (a) Uses only groundwater as its source; or
    (b) Purchases finished water from another public water system.
(2) Water distribution classification applies when a water system is not classified as small in accordance with section (1) of this rule, and is based on the population served by the water system as follows:

    Classification: — Population Served:
    Water Distribution 1 — 1 to 1,500
    Water Distribution 2 — 1,501 to 15,000
    Water Distribution 3 — 15,001 to 50,000
    Water Distribution 4 — 50,001 or more

(3) Water treatment classification applies to water treatment plants when:

(a) A water system is not classified as small in accordance with section (1) of this rule; and

(b) Treatment is provided for contaminants identified in OAR 333-061-0030(1) through (5) and (7) by that water treatment plant.

(c) Water treatment classification is based on a point system that reflects the complexity of water treatment present. Points are assigned as follows:

Item	Points
Treatment System Size: (population served or flow whichever is greater)	
Population served	1/10,000 (max 30)
Average daily flow	1/1 mgd (max 30)
Treatment System Water Source:	
Groundwater:	3
Surface Water or Groundwater Under the Influence of Surface Water	5
Chemical Treatment/Addition Process:	
Fluoridation	5
Disinfection:	
Ultraviolet (UV)	2
UV with Chlorine Residual	5
Ammonia/Chloramination	3
Chlorine	5
Mixed Oxidants	7
Ozonation (on-site generation)	10
Residual Maintenance	0
pH Adjustment:	
Slaked-Quicklime (Calcium Oxide)	5
Hydrated Lime (Calcium Hydroxide)	4
All others (hydrochloric acid, sodium hydroxide, sulfuric acid, sodium carbonate)	1
Coagulation & Flocculation Processes:	
Chemical addition (1 point for each type of chemical coagulant or polymer added, maximum 5 points)	1-5
Rapid Mix Units:	
Mechanical mixers	3
Injection mixers	2
In-line blender mixers	2
Flocculation Units:	
Hydraulic flocculators	2
Mechanical flocculators	3

Clarification and Sedimentation Processes:

Adsorption Clarifier 10
Horizontal-flow (rectangular basins) 5
Horizontal-flow (round basins) 7
Up-flow solid contact sedimentation 15
Inclined-plate sedimentation 10
Tube sedimentation 10
Dissolved air flotation 10

Filtration Processes:

Single/mono media filtration 3
Dual or mixed media filtration 5
Membrane Filtration/Microscreens 5
Direct 5
Diatomaceous earth 12
Slow sand filtration 5
Cartridge/bag filters 5
Pressure or greensand filtration 10

Stability or Corrosion Control:

Slaked-Quicklime (calcium oxide) 10
Hydrated Lime (calcium hydroxide) 8
Caustic soda (sodium hydroxide) 6
Orthophosphate 5
Soda ash (sodium carbonate) 4
Aeration: Packed tower, Diffusers 3
Calcite 2
Others: sodium bicarbonate, silicates 4

Other Treatment Processes:

Aeration 3
Packed tower aeration 5
Ion exchange/softening 5
Lime-soda ash softening 20
Copper sulfate treatment 5
Powdered activated carbon 5
Potassium permanganate 5
Special Processes (reverse osmosis, activated alumina, other) 15
Sequestering (polyphosphates) 3

Residuals Disposal:

Discharge to lagoons 5
Discharge to lagoons and then raw water source 8
Discharge to raw water 10
Disposal to sanitary sewer 3
Mechanical dewatering 5

On-site disposal 5
Land application 5
Solids composting 5

Facility Characteristics Instrumentation:

The use of SCADA or similar instrumentation systems to provide data with no process control 1
The use of SCADA or similar instrumentation systems to provide data with partial process control 3
The use of SCADA or similar instrumentation systems to provide data with complete process control 5
Clear well size less than average day design flow 5

Classification of Water Treatment Plants

Classification	Points:
Water Treatment 1	1 to 30
Water Treatment 2	31 to 55
Water Treatment 3	56 to 75
Water Treatment 4	76 or more

(4) Filtration endorsement is an additional classification that applies when a water treatment plant is classified as Water Treatment 2 and uses conventional or direct filtration treatment to treat surface water or groundwater under the influence of surface water. Filtration endorsement certification, as prescribed by OAR 333-061-0235, is required for operators designated in direct responsible charge of a water treatment plant receiving the filtration endorsement classification, except for those operators already certified at Water Treatment Level 3 or higher.

Stat. Auth.: ORS 448.131
Stats. Implemented: ORS 448.450, 448.455, 448.460, 448.465 & 448.994

333-061-0225
General Requirements Applying to Water Suppliers and Water Systems

(1) Water suppliers responsible for community and non-transient non-community water systems must at all times employ, contract with, or otherwise utilize an operator to be in direct responsible charge of every distribution system and water treatment plant. An operator designated in direct responsible charge of a distribution system or water treatment plant must be available during those periods of time when decisions relating to treatment processes, water quality, and water quantity that may affect public health are made.

(a) The operator(s) described in this section must be certified as prescribed by OAR 333-061-0228 or OAR 333-061-0235 through 0265, at a level equal to or greater than the classification of the distribution system or water treatment plant as prescribed by OAR 333-061-0220, for which they are responsible.

(b) A water supplier subject to this rule must report to the Authority, the name(s) of the operator(s) that has been designated to be in direct

responsible charge of the distribution system and water treatment plant as applicable, and must notify the Authority within 30 days of any change of operator.

(2) A water supplier may employ, contract with, or utilize other operators in addition to those required by section (1) of this rule. For operators certified at less than the Authority-required level(s) for distribution or treatment, the water supplier must establish a written protocol for each of the other operators that:

(a) Describes the operational decisions the operator is allowed to make;

(b) Requires the operator to notify the operator in direct responsible charge when they make decisions related to process control, water quality or water quantity that may affect public health;

(c) Describes the specific conditions under which the operator must consult with the operator in direct responsible charge, and when and how consultation is to be made;

(d) Takes into account the certification level of the operator; their knowledge, skills, and abilities, and the range of expected operating conditions of the water system; and

(e) Is signed and dated by the operator in direct responsible charge and the operator to which the protocol applies, and is available for inspection by the Authority.

Stat. Auth.: ORS 448.131
Stats. Implemented: ORS 448.450, 448.455, 448.460, 448.465 & 448.994

333-061-0228
Certification Requirements for Small Water System Operators

(1) In order to apply for certification as the operator of a water system classified as small as prescribed by OAR 333-061-0220(1), individuals must:

(a) Have graduated from high school or completed an approved GED program; and

(A) Complete an Authority approved training for small water system operations and water treatment processes; or

(B) Pass an Authority approved written examination relating to small water system operations and water treatment; and

(b) Submit a certificate demonstrating the completion of the required training or examination specified in paragraphs (1)(a)(A) or (B) of this rule.

(2) Certification at the small water system level expires on July 31 three years after the training or examination as specified in paragraphs (1)(a)(A) or (B) was completed.

(3) Individuals certified as prescribed by OAR 333-061-0235 through OAR 333-061-0265 at levels 1 through 4 for water distribution or water treatment are qualified to be designated in direct responsible charge of a water system classified as small as prescribed by OAR 333-061-0220(1).

(4) Small water system certification as prescribed by this rule is exempt from fees.

Stat. Auth.: ORS 448.131

Stats. Implemented: ORS 448.450, 448.455, 448.460, 448.465 & 448.994

333-061-0230
Contracting For Services

(1) Water suppliers responsible for community and non-transient non-community water systems may establish contracts with an individual certified operator, another water supplier, or an organization with certified operators available for contract to obtain operational services at a public water system.
(2) Operators contracted to be in direct responsible charge of a water system, distribution system or a water treatment plant, as prescribed by OAR 333-061-0225 must be certified at or greater than the level of the classification of the water system or facility for which they will be responsible.
(3) Written contracts for operators designated in direct responsible charge of a water system must:
    (a) Require the operator to be available on call 24 hours every day and able to respond on-site, to the water system, upon request; and
    (b) Specify that the operator will take corrective action when the results of analyses or measurements indicate maximum contaminant levels have been exceeded or minimum treatment levels are not maintained.
(4) Water suppliers must submit to the Authority, a copy of any contract established for certified operators serving at a water system for which the water supplier is responsible.
    (a) Contracts must be signed by the operator and the water supplier, or an authorized representative of the water supplier, before the operator may provide any services to the water supplier.
    (b) Contracts must be submitted to the Authority within 30 days of the contract being signed by all parties.
(5) Contracts are only valid for individuals that possess current certification.

Stat. Auth.: ORS 448.131
Stats. Implemented: ORS 448.450, 448.455, 448.460, 448.465 & 448.994

333-061-0232
General Requirements Applying to Water System Operators

Operators serving at water systems and water system facilities as specified in OAR 333-061-0210 are responsible for ensuring the safe operation of the water system facilities for which they are responsible, and the production of safe drinking water at that water system. All operators serving at water treatment plants and distribution systems must:

(1) Comply with any Authority order or investigation;
(2) Ensure every application, record, or other document filed with or reported to the Authority by the operator is true and accurate; and
(3) Immediately notify the Authority when a violation of these rules is observed that may result in a public health hazard.

Stat. Auth.: ORS 448.131

Stats. Implemented: ORS 448.450, 448.455 & 448.994

333-061-0235
Operator Certification Requirements, Levels 1-4

Operator certification, as specified in this rule, applies to each of the levels of water system facility classification specified in OAR 333-061-0220(2) through (4), and does not apply to small water system classification as specified in OAR 333-061-0220(1).

(1) In order to receive certification as specified in this rule, applicants must:
   (a) Provide proof of, including the date of graduation or completion, a high school diploma, GED, associate's degree, bachelor's degree, master's degree, or PhD; and
   (b) Successfully complete an examination for the level and type of certification sought by the applicant.

(2) Minimum qualifications for water treatment (WT) or water distribution (WD) operator certification are identified in Table 46. Experience or a combination of experience and education is required depending on the certification and level sought.

Table 46

Certification Type and Level of Certification	Required Combination of Experience and Post High School Education		Operational Decision Making Experience Required [3]
	Experience [1]	Education [2]	
WD or WT level 1	12 months	None	None
	6 months	Associate's Degree in Water Technology	None
WD or WT level 2	36 months	None	None
	24 months	12 months	None
WD level 3	96 months	None	30 months
WD or WT level 3	60 months	12 months	30 months
	48 months	24 months	24 months
	36 months	36 months	18 months
WD level 4	120 months	None	36 months
	84 months	12 months	30 months
WD or WT level 4	72 months	24 months	30 months
	60 months	36 months	30 months
	48 months	48 months	24 months

[1] Months of work experience required, as specified in OAR 333-061-0235(2)(a).
[2] Months of education required for acceptance as substitution for work experience, as specified by OAR 333-061-0235(2)(b).
[3] Months of operational decision making experience required, as specified in OAR 333-061-0235(4). This experience may also count as general work experience.

   (a) Operating experience must have been gained through direct, "hands-on" operation of water system facilities and includes, but is not limited to, decisions related to water quality or quantity that may affect public health.

Knowledge gained from the performance of duties as an official, inspector, manager, engineer, or director of public works, and that does not include the actual operation or supervision of water system facilities, does not qualify an individual for certification as prescribed by these rules.

(A) For water distribution certification, experience in one of the following fields may be accepted, not to exceed one-half of the total experience required: wastewater collection; water treatment; cross connection control; and industrial or commercial process water treatment.

(B) For water treatment certification, experience in one of the following fields may be accepted, not to exceed one-half of the total experience required: wastewater treatment; wastewater treatment laboratory; water distribution; and industrial or commercial process water treatment.

(C) One year of experience is equivalent to 12 months of full-time employment with one hundred percent of the individual's time dedicated to activities directly related to the certification for which they are applying.

(D) Operating experience earned at a water treatment plant or distribution system is considered qualifying experience for certification up to one classification level higher than that of the water system facility where the experience was earned.

(b) The Authority may, at its discretion, permit the substitution of post high school education for experience. Acceptable fields of study include, but are not limited to: allied sciences, chemistry, engineering, industrial or commercial water processing, wastewater collection, wastewater treatment plant operations, wastewater laboratory analysis, water distribution, and water treatment plant operations.

(A) Substituted education may not exceed one-half of the experience required for the certification and level sought.

(B) Any degree or accumulation of college credit hours must be from an educational institution accredited through an agency recognized by the U.S. Department of Education to be acceptable.

(C) The following are considered equivalent to 12 months of post high school education:

(i) One year of college education;

(ii) Thirty semester hours of college education;

(iii) Forty-five quarter hours of college education; or

(iv) Forty-five continuing education units (CEU).

(D) College credits and post high school education from other sources may be combined to total 45 CEU.

(3) Individuals may request credit for on-the-job training as either experience or education, but not both.

(4) Individuals seeking certification at water distribution and water treatment levels 3 and 4 must possess experience in operational decision making as defined in OAR 333-061-0020(126). Any work experience as specified in subsection (2)(a) of this rule qualifies as operational decision making experience if it meets the criteria specified in OAR 333-061-0020(126).

(5) To qualify for filtration endorsement certification, as prescribed by OAR 333-061-0220(4), individuals must:
   (a) Possess WT Level 2 certification;
   (b) Have one year of operational decision making experience at a water treatment plant utilizing conventional or direct filtration treatment; and
   (c) Successfully pass a filtration endorsement examination.

Stat. Auth.: ORS 448.131, 448.150
Stats. Implemented: ORS 448.450, 448.455

333-061-0245
Applications for Certification, Levels 1-4

(1) An applicant for certification must submit documentation with any application demonstrating that their qualifying experience and education meets the minimum requirements as specified in OAR 333-061-0235.

(2) To obtain initial certification or certification at a higher level by examination, individuals must:
   (a) Submit complete, original, signed copies of their application for the examination, and affidavit of experience;
   (b) Meet the minimum qualifications for the certification sought as prescribed by OAR 333-061-0235;
   (c) Pay the applicable examination fee as prescribed by OAR 333-061-0265 for the certification sought and examination applied for; and
   (d) Successfully pass the examination for the certification sought.

(3) To obtain certification by reciprocity, individuals must:
   (a) Possess current, valid certification in another state or province which has a recognized certification program substantially equivalent to the requirements set forth in these rules;
   (b) Submit a complete, original, signed reciprocity application and an affidavit of experience;
   (c) Pay the applicable reciprocity application fee as prescribed by OAR 333-061-0265 for each certificate desired; and
   (d) Pay the exam fee as prescribed by OAR 333-061-0265, for any examination as prescribed by OAR 333-061-0250, if required by the Authority.

(4) All applications for exams must be accompanied by the appropriate fee(s) and documentation, and must be submitted to the Authority 60 days prior to the desired examination date.

(5) Operating experience earned at a water treatment plant or distribution system is considered qualifying experience for examinations up to one classification level higher than that of the water system where the applicant gained their experience.

Stat. Auth.: ORS 448.131
Stats. Implemented: ORS 448.450, 448.455, 448.460, 448.465 & 448.994

333-061-0250
Examinations for Certification, Levels 1-4

(1) Examinations will be provided at locations and at times designated by the Authority or its designee.
(2) Applicants must obtain a minimum score of 70 percent in order to pass the examination.
(3) Individuals may not take the same examination more than twice in a 12 month period unless they can demonstrate, to the satisfaction of the Authority, that they have completed specific education related to the examination since taking the second examination.
(4) The Authority or its designee will score all examinations and notify applicants of the results. Examinations will not be returned to the applicant.

Stat. Auth.: ORS 448.131
Stats. Implemented: ORS 448.450, 448.455, 448.460, 448.465 & 448.99

333-061-0260
Certification Renewal, Levels 1-4

(1) Certification expires December 31 every two years based upon the first letter in the last name of the individual. Certification for individuals with names beginning in the letters A-K expires in even numbered years, and certification for individuals with names beginning in the letters L-Z expires in odd numbered years. Certification renewal fees may be prorated if an individual's current certification expires one year prior to the beginning of the next two-year certification period.
(2) Operators must earn two continuing education units (CEU) every two years in areas of relevant subject matter as described below.
    (a) CEU for specialized operator training will be accepted from the following categories at the discretion of the Authority.
        (A) Technical capacity: water treatment facilities construction and performance, source construction and protection, capacity, storage, pumping and distribution facility construction and protection, water distribution integrity/leakage and water quality issues related to public/user health.
        (B) Managerial capacity: water system operation, planning, system governance, development and implementation of system policies, professional support, record keeping, drinking water and related regulations to insure protection of public health, communication and involvement with water users.

(C) Financial capacity: adequacy of revenues to meet expenses, revenue sources, affordability of user charges, rate setting process, budgeting, production and utilization of a capital improvement plan, periodic financial audits, bond ratings, debt and borrowing.

(b) Two college credits in the fields of engineering, chemistry, water/wastewater technology, or allied sciences satisfy continuing education requirements.

(c) CEU from other states having standards equal to or greater than these rules may be accepted by the Authority.

(d) Maintaining CEU records is the responsibility of the operator.

(e) CEU credit will be awarded for the same course or training only once every two year period.

(3) An operator who fails to renew their certification as prescribed by section (1) of this rule by the expiration date cannot be in direct responsible charge of a water system.

(4) The Authority may grant certification renewal without a reinstatement fee until January 31 in the year following the expiration date of the certification. A reinstatement fee as prescribed by OAR 333-061-0265 is required in addition to any renewal fees for all renewal applications received after the grace period ending on January 31 immediately following the expiration date of the certification.

(5) Any certified operator who fails to renew their certification for one year following the expiration date of the certification must meet the requirements established for initial applicants for certification as specified in OAR 333-061-0245.

Stat. Auth.: ORS 448.131

Stats. Implemented: ORS 448.450, 448.455, 448.460, 448.465 & 448.994

333-061-0265

Fees

(1) All fees must be paid to the Oregon Health Authority or its designee.

(2) Application fees are not refundable unless:

(a) The Authority has taken no action on a certification application; or

(b) The Authority determines the wrong application has been filed.

(3) Applicants for certification by exam must submit the exam fee and application fee, along with an original signed and complete application. Examination fees may be refunded if:

(a) The application is denied, or

(b) The applicant notifies the Authority no less than one week in advance of the exam that the applicant is unable to sit for the exam.

(4) Applications will be accepted for processing only when accompanied by the appropriate fees as indicated in the fee schedule below:

(a) Certification Renewal -- $140

(b) Combination Certification-each additional -- $70

(c) Application Fee:

(A) Level 1 Distribution or Treatment -- $90

(B) Level 2 Distribution or Treatment -- $125
(C) Level 3 Distribution or Treatment -- $160
(D) Level 4 Distribution or Treatment -- $195
(E) Filtration Endorsement -- $90

(d) Reciprocity Review (each certification) -- $100
(e) Reinstatement -- $50 + Certificate Renewal Fee
(f) Document Replacement Fee -- $25

(5) Filtration endorsement certification is an extension of an operator's water treatment certification, and no additional annual fee is required to maintain the endorsement.

(6) A document replacement fee must be paid at the time of request for a replacement document.

Stat. Auth.: ORS 448.131, 448.450
Stats. Implemented: ORS 448.131, 448.450, 448.465

333-061-0270
Refusal, Suspension, or Revocation of Certification

(1) The Authority may deny an individual's initial or renewal application for operator certification, or suspend or revoke an operator's certification if the applicant or operator:
(a) Obtained the certificate by fraud, deceit, or misrepresentation;
(b) Has been grossly negligent, incompetent or has demonstrated misconduct in the performance of the duties of an operator or supervisor of a distribution system or water treatment plant in Oregon or any other state, province or country;
(c) Has violated or failed to comply with any Authority rule or order;
(d) Fails to comply with any Authority investigation; or
(e) Knowingly makes any false statement or misrepresentation in any application, record, or other document filed with the Authority.

(2) An individual whose application or certification is proposed to be denied, suspended, or revoked has the right to a hearing pursuant to ORS chapter 183.

(3) No person whose certificate has been revoked under this rule is eligible to apply for certification for one year from the effective date of the final order of revocation. Any such person who applies for certification must meet all the requirements established for initial applicants.

Stat. Auth.: ORS 448.131
Stats. Implemented: ORS 431.110, 431.150, 448.450, 448.455, 448.460, 448.465 & 448.994

333-061-0272
Suspension of Certification

(1) The Authority may immediately suspend an operator's certification for violation of any portion of OAR 333-061-0005 to 333-061-0270 if the Authority finds that

such violation(s) constitute a serious danger to the public health or safety. The Authority shall set forth specific reasons for such findings.

(2) An operator has 90 days from the date of notice to the operator to request a hearing. The hearing shall be held as soon as practicable if a request for hearing is received by the Authority.

Stat. Auth.: ORS 448.131
Stats. Implemented: ORS 431.110, 431.150, 448.450, 448.455 & 448.994

Domestic Wells

333-061-0305
Purpose

The purpose of these rules is to provide a basis for implementing ORS 448.271. This law became effective on July 24, 1989, and establishes a program to provide water quality monitoring of underground aquifers that are used for domestic purposes.

Stat. Auth.: ORS 448.131
Stats. Implemented: ORS 448.271

333-061-0310
Scope

These rules apply to sellers in any transaction for the sale or exchange of real estate that includes a dug, drilled or driven well that supplies ground water for domestic purposes. Properties with springs that are used for domestic purposes are exempt from these rules. The seller is required to have certain tests done on the well water and send the results to the Authority. Failure of seller to test will not interfere with the sale of the property. The Authority may require tests for other contaminants under certain conditions.

Stat. Auth.: ORS 448.131
Stats. Implemented: ORS 448.271

333-061-0324
Area of Public Health Concern

If the Authority confirms, as a result of monitoring required by OAR 333-061-0036, monitoring or assessment activities conducted by the Department of Environmental Quality, or any other scientifically valid data approved by the Authority, the presence of contaminants likely to cause adverse human health effects in groundwater supplies, then the Authority may declare an area of public health concern. The declaration shall specify the following:

(1) The specific aquifer(s) or geographic boundaries subject to the contamination;
(2) The detected contaminant(s);
(3) The human health risks attributed to the contaminant;
(4) The expected duration of the contamination; and
(5) The suspected or confirmed source of the contamination.

Stat. Auth.: ORS 448.131

Stats. Implemented: ORS 448.271

333-061-0325
Domestic Well Tests

(1) In any transaction for the sale or exchange of real estate that includes a well that supplies ground water for domestic purposes, the seller of the real estate shall, upon accepting an offer to purchase that real estate, have the well water tested for arsenic, nitrate, and total coliform bacteria. If the well is in a designated area of public health concern, the Authority may require additional testing.

(2) The seller, or seller's designee, must submit the results of the required tests to the Authority and to the buyer within 90 days of receiving the results of the tests.

(3) If the seller, or seller's designee, fails to comply with sections (1) and (2) of this rule, this does not invalidate any of the documents needed to complete the sale of the real estate.

(4) The seller, or seller's designee, is responsible for making sure that the Authority's Water Systems Data Sheet is completed and submitted to the Authority with copies of the arsenic, nitrate, and total coliform bacteria lab slips.

(5) The Water Resources Department well identification number and a description of the property shall be entered on the water system data sheet for the seller to be considered in compliance with ORS 448.271. The description shall include township, range, section, street address, city, state and zip code.

(6) The lab tests required by ORS 448.271 cannot be waived even if the buyer agrees not to have the well tested.

(7) The lab tests for arsenic, nitrate, and coliform bacteria are considered valid for one year if they are associated with the sale of the property.

(8) If the well is not on the property being sold, but the real property includes an interest to a well on adjacent property, including an easement, that interest would be considered part of the real property. Therefore the tests would be required.

(9) ORS 448.271 only applies to wells that have been made operational to supply groundwater for domestic purposes. Capped domestic wells on unimproved lots are not required to be tested.

Stat. Auth.: ORS 448.131
Stats. Implemented: ORS 431.110, 431.150, 448.131 & 448.271

333-061-0330
Accredited Laboratories
Only laboratories accredited according to Oregon Environmental Laboratory Accreditation Program (ORELAP) standards, as prescribed by OAR 333-064-0005 through 0065, shall be used to conduct the water tests required by these rules.
Stat. Auth.: ORS 448.131
Stats. Implemented: ORS 431.110, 431.150, 448.131 & 448.271

333-061-0335
Sample Collection
(1) Only persons who have knowledge of the appropriate procedures for the collection and handling of the water samples for arsenic, nitrate, and total coliform bacteria and who have experience in this area shall collect the samples. These persons include Registered Sanitarians, certified water system operators, well drillers, pump installers, and lab technicians. Specific instructions for the collection, preservation, handling and transport of the samples may be obtained from certified laboratories, county health departments or the Authority and must be strictly adhered to.
(2) The samples must be drawn from the source prior to any form of water treatment. Samples may be collected after treatment injection points where water treatment has been bypassed or temporarily disabled.
(3) In the event that the well has been shock chlorinated, no follow-up samples shall be taken until five days have elapsed.
Stat. Auth.: ORS 448.131
Stats. Implemented: ORS 431.110, 431.150, 448.131 & 448.271